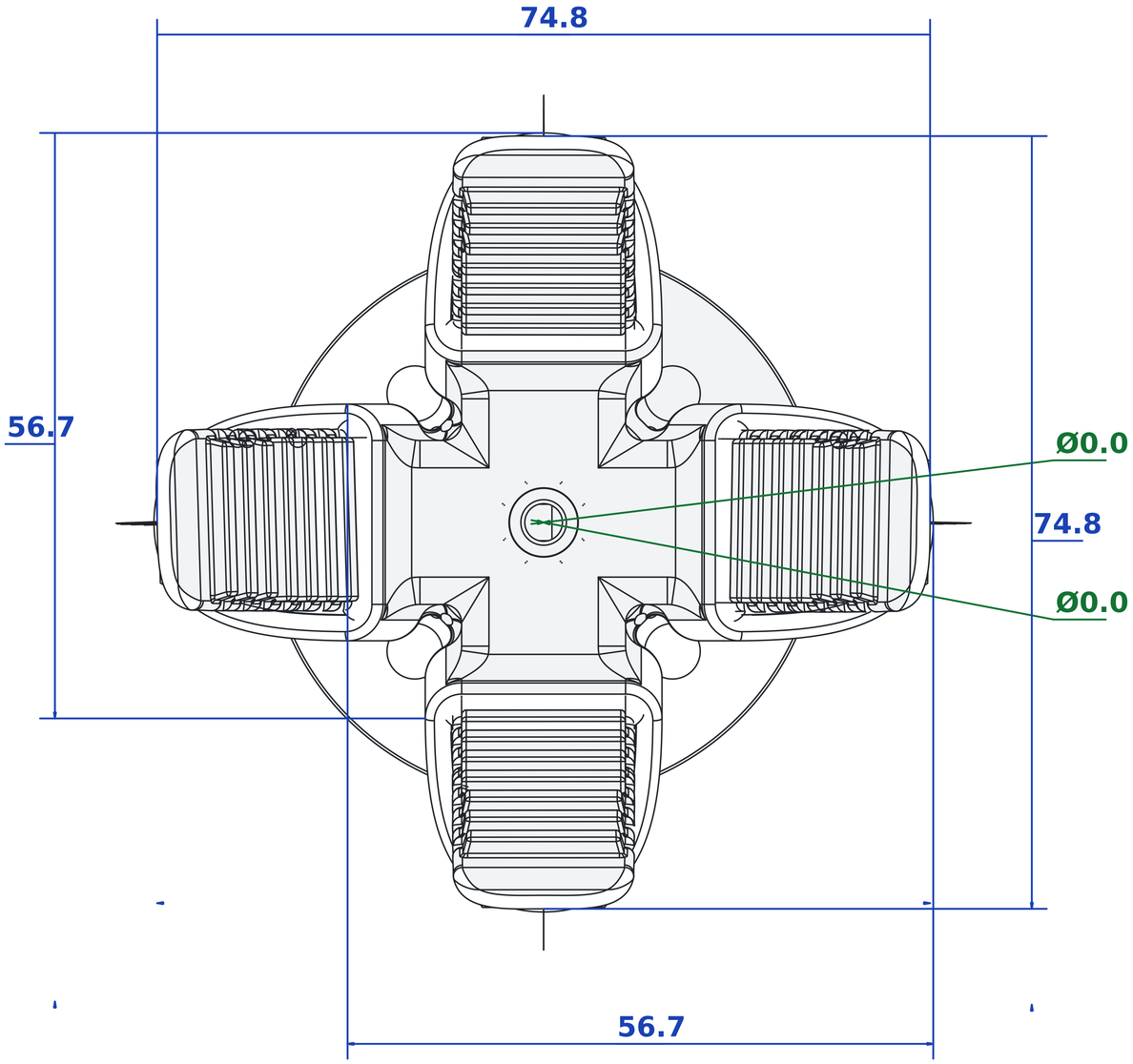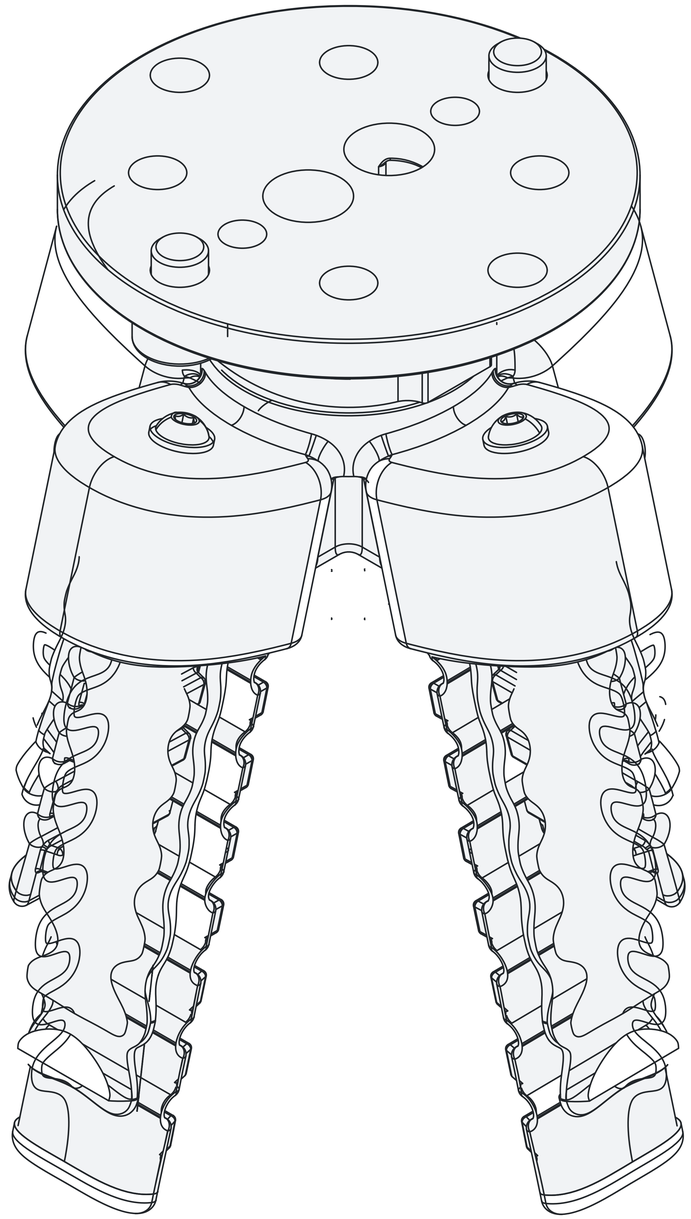
74.8
56.7
Ø0.0
74.8
Ø0.0
56.7