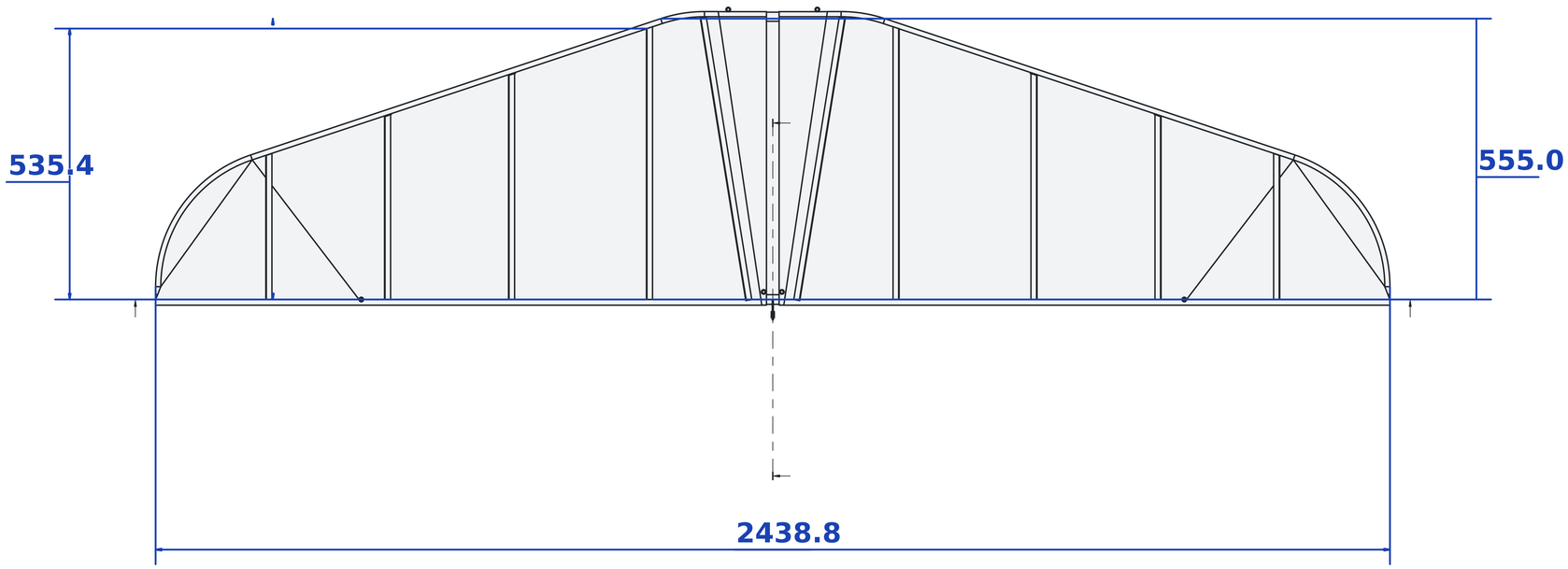
535.4
555.0
2438.8