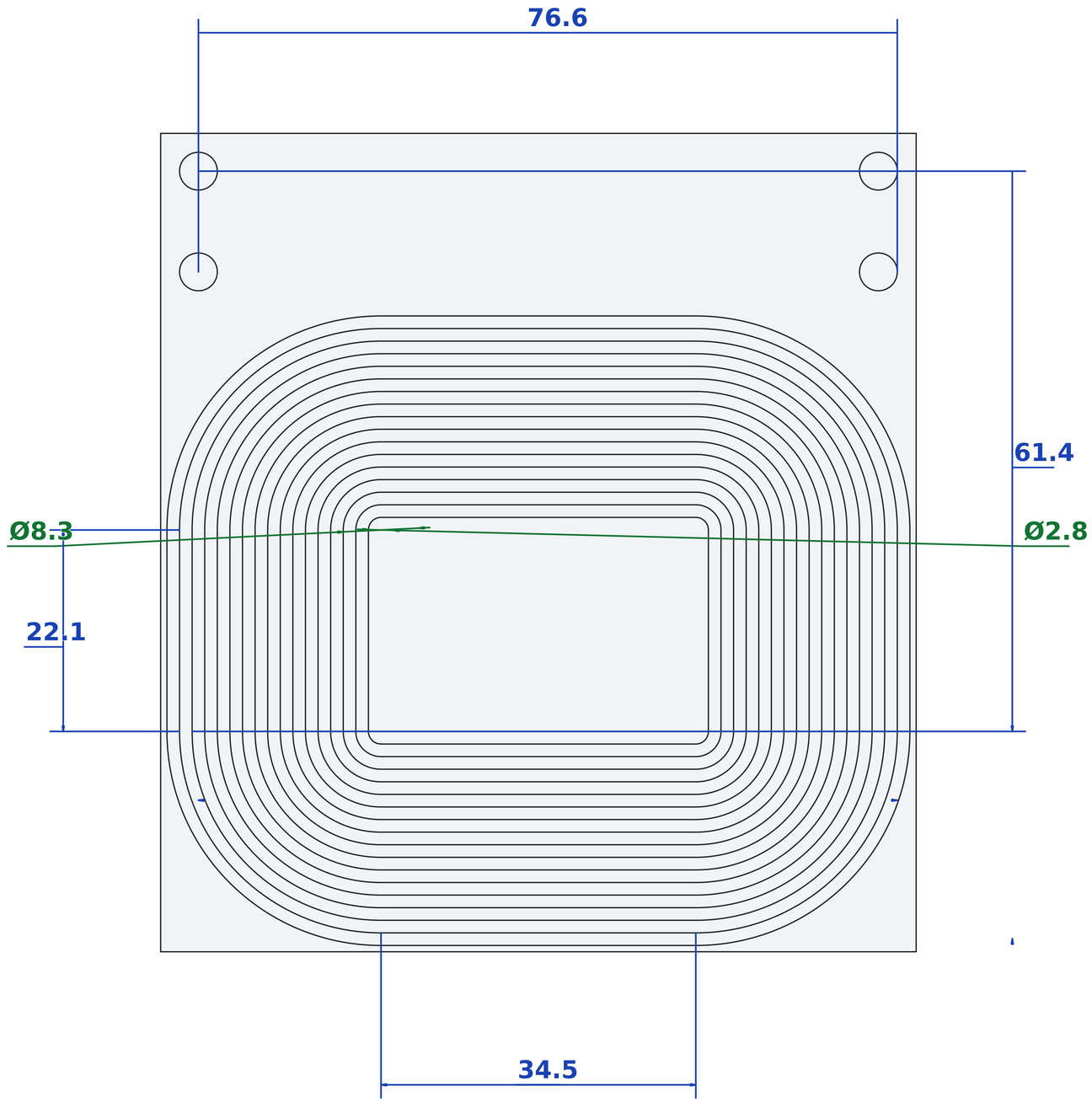
76.6
61.4
Ø8.3
Ø2.8
22.1
34.5

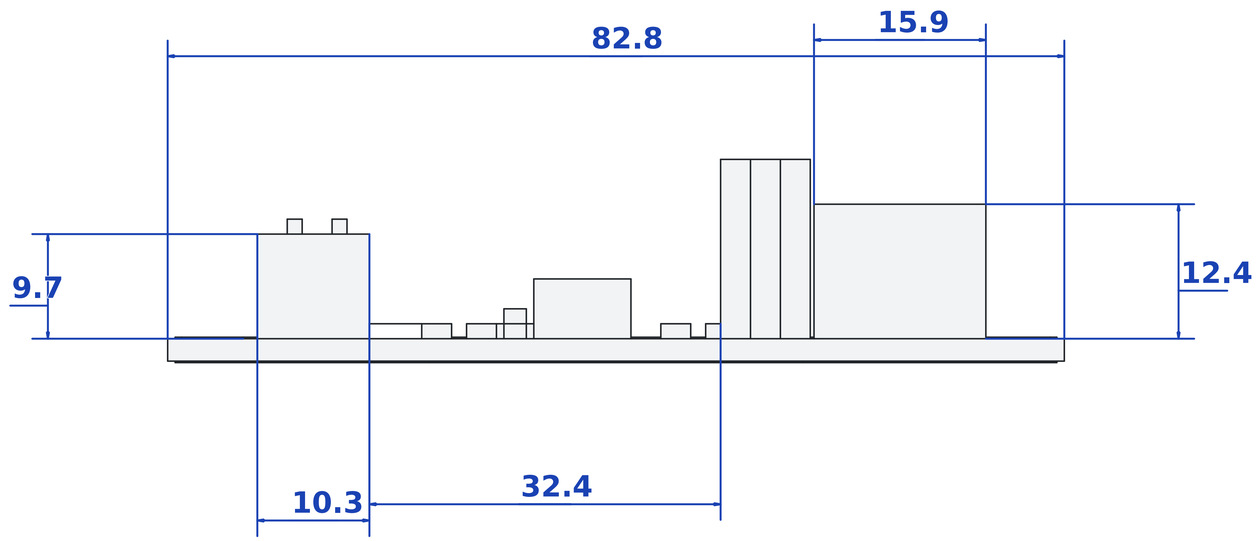
82.8
15.9
9.7
12.4
10.3
32.4

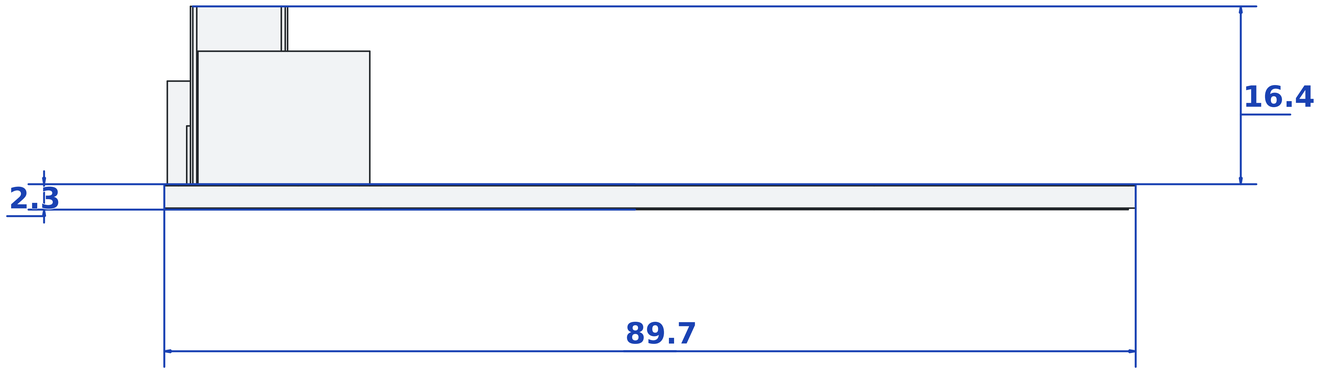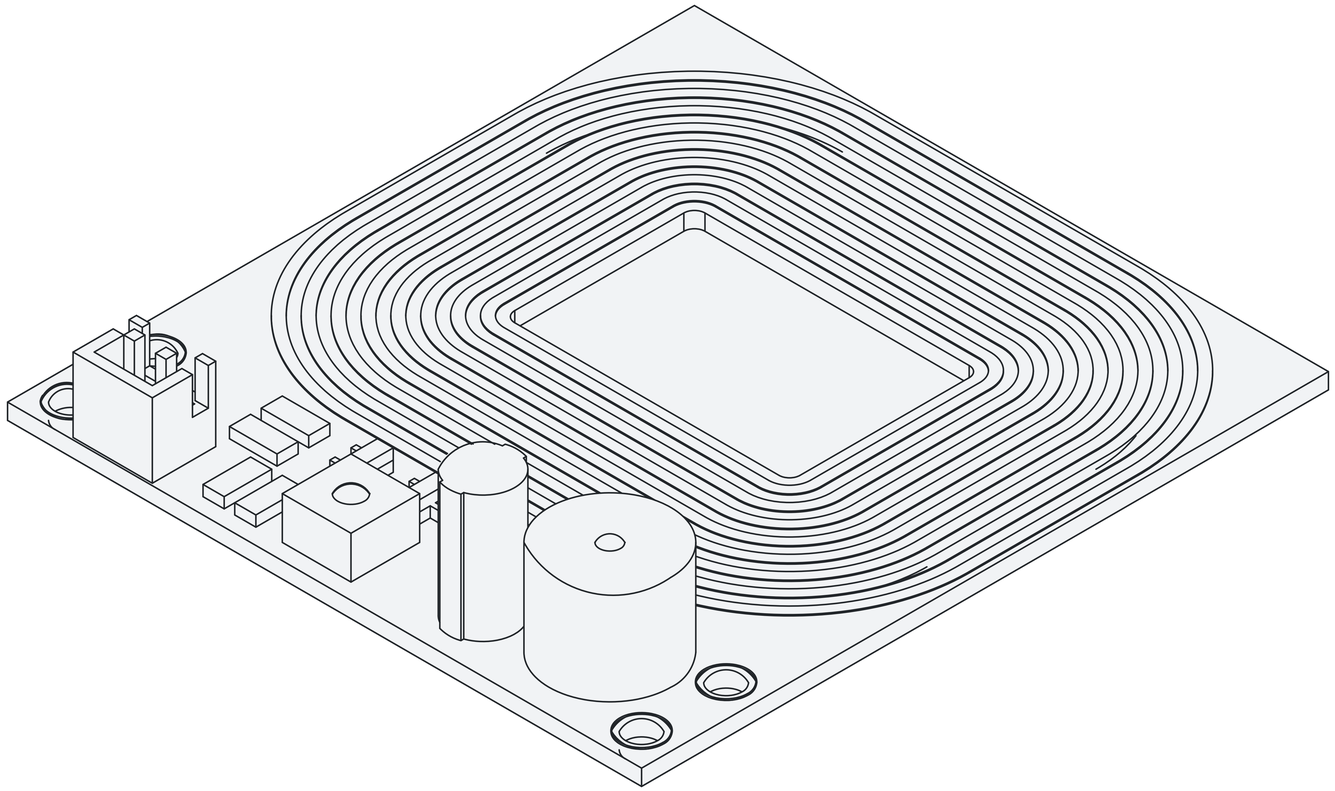
16.4
2.3
89.7