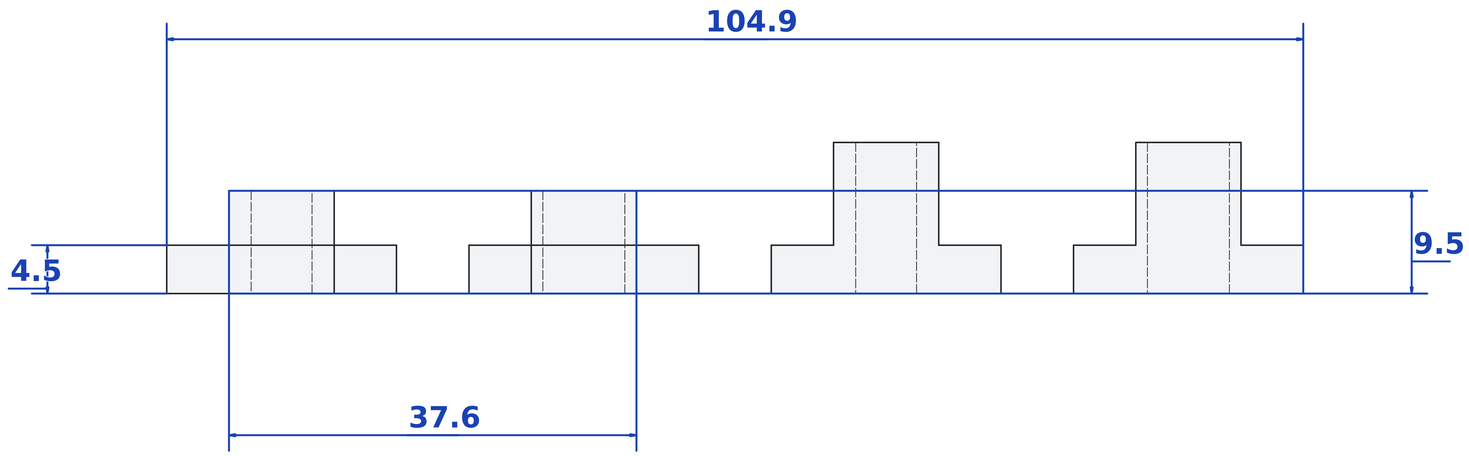
104.9
4.5
9.5
37.6