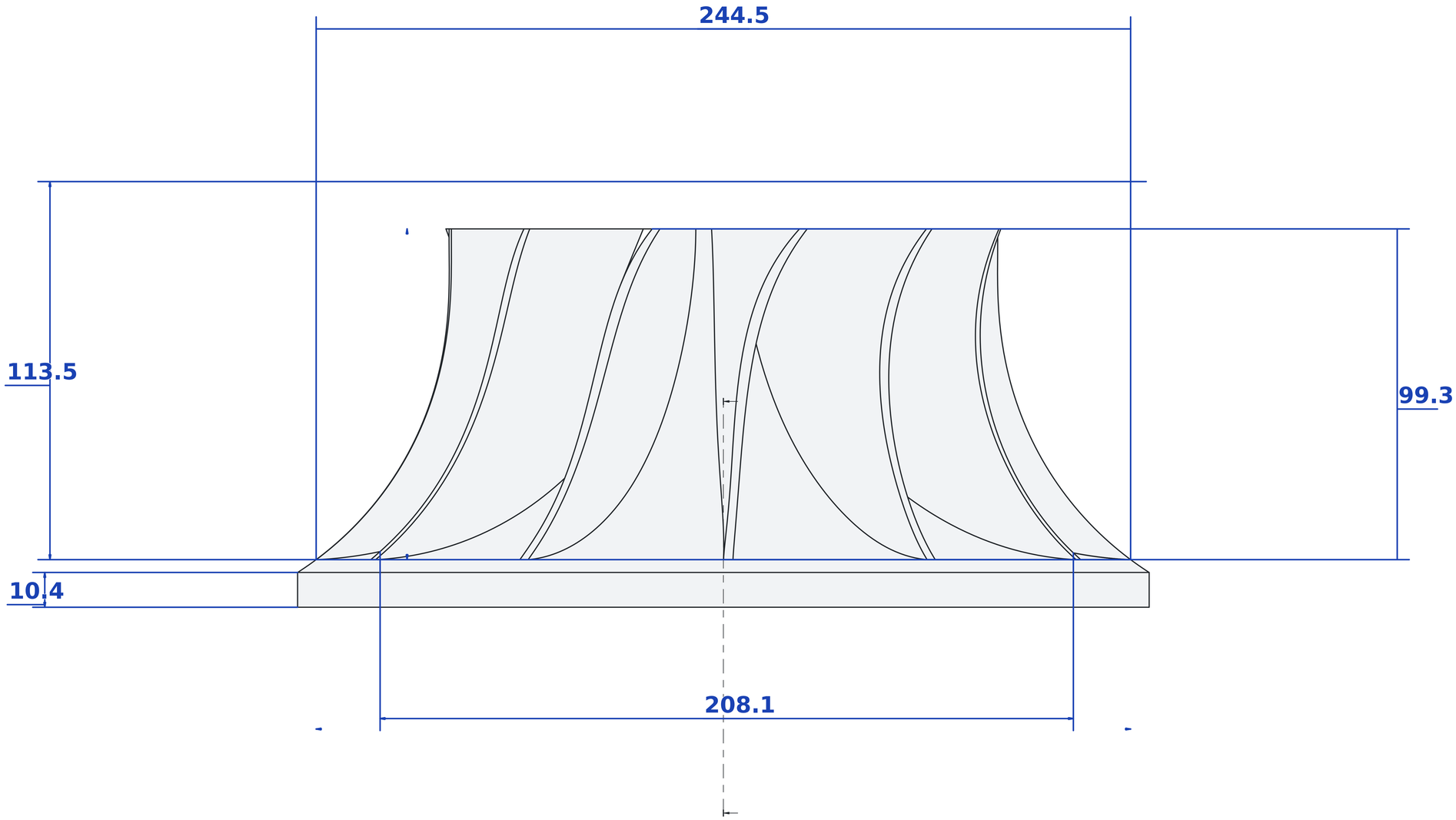
244.5
113.5
99.3
10.4
208.1

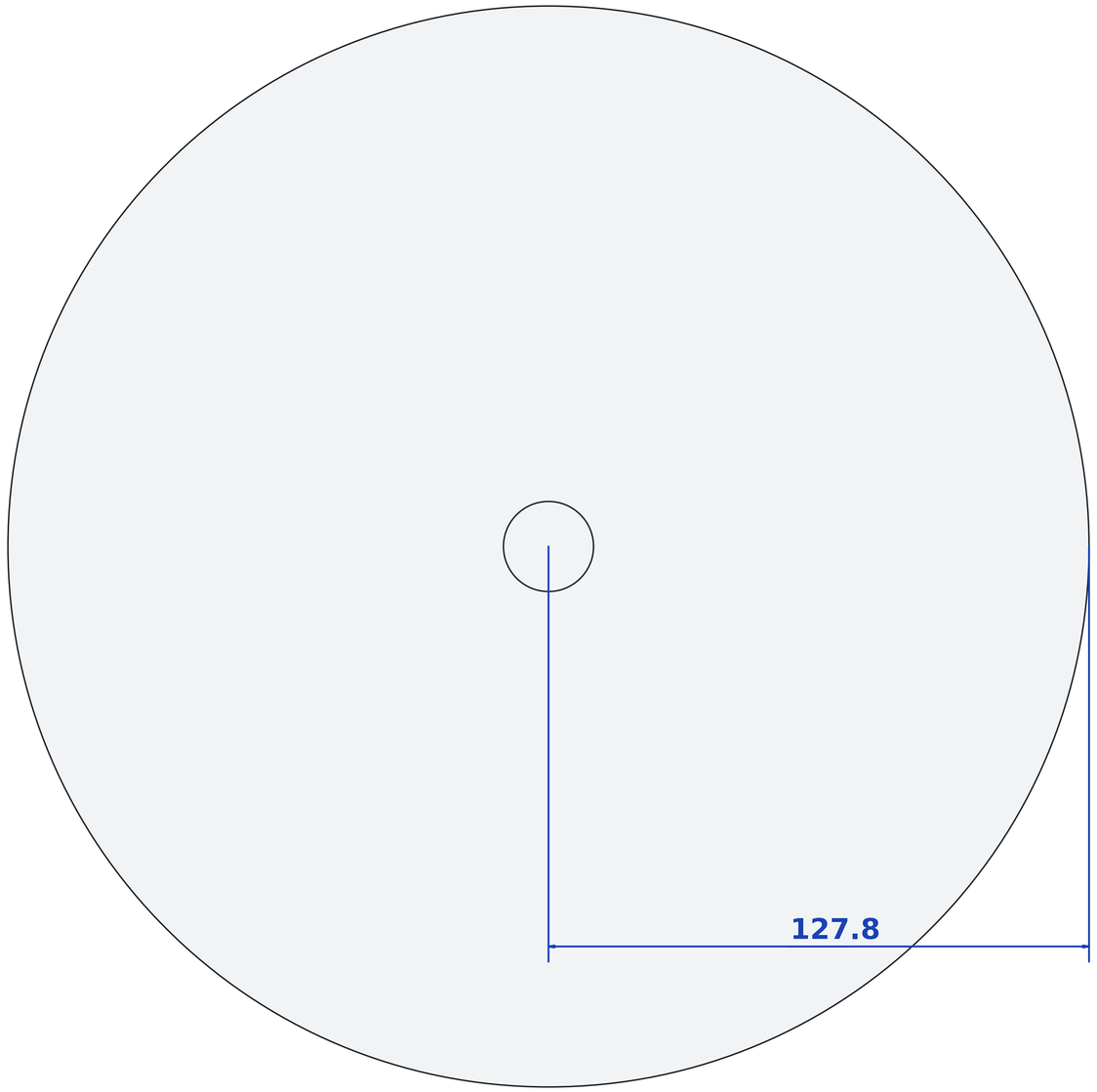
127.8

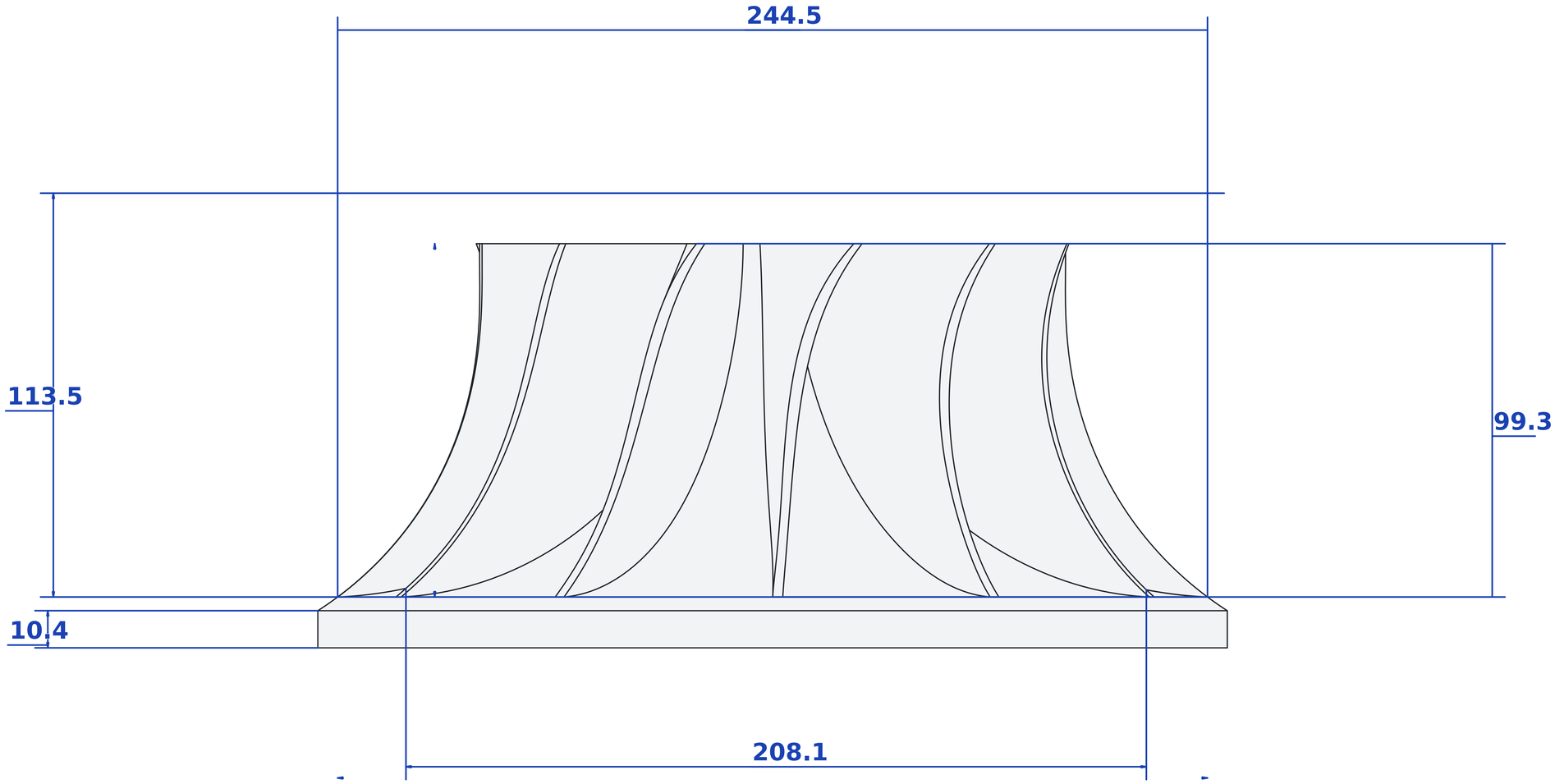
244.5
113.5
99.3
10.4
208.1

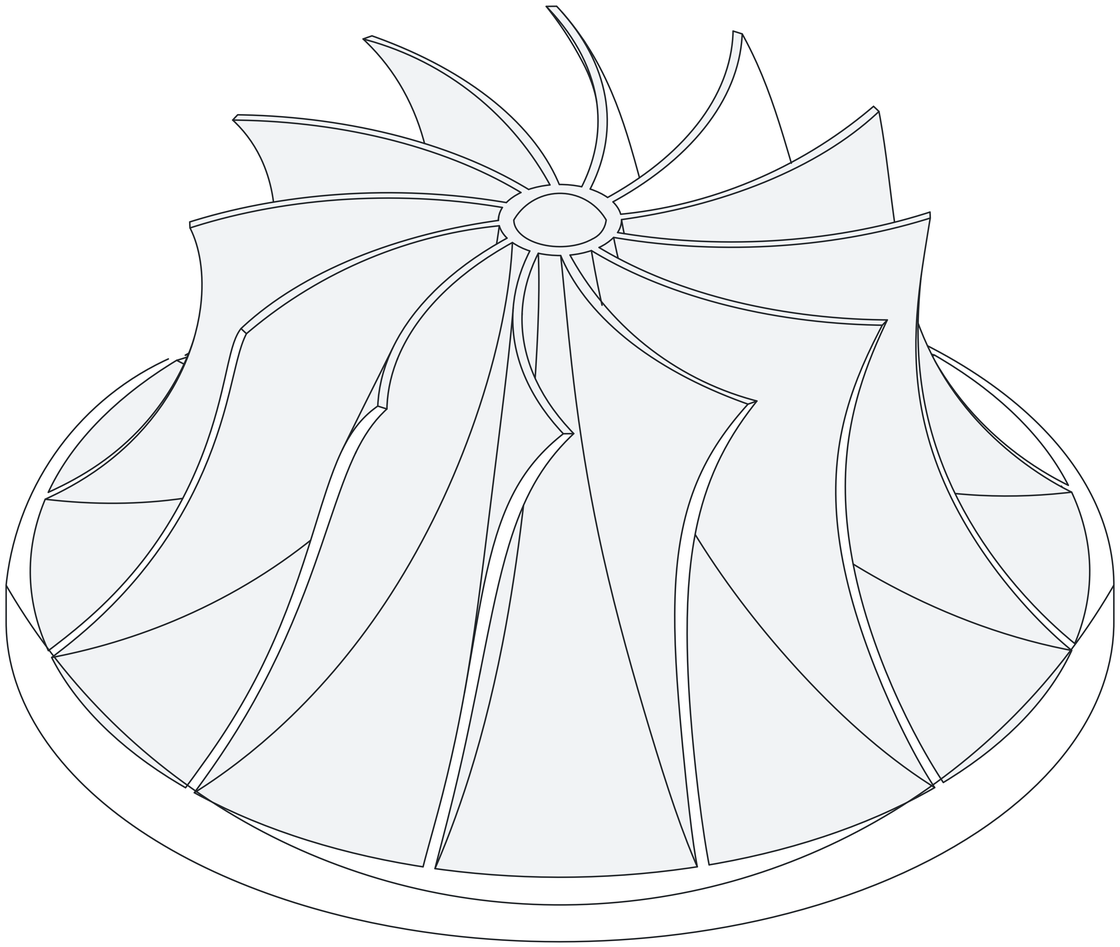

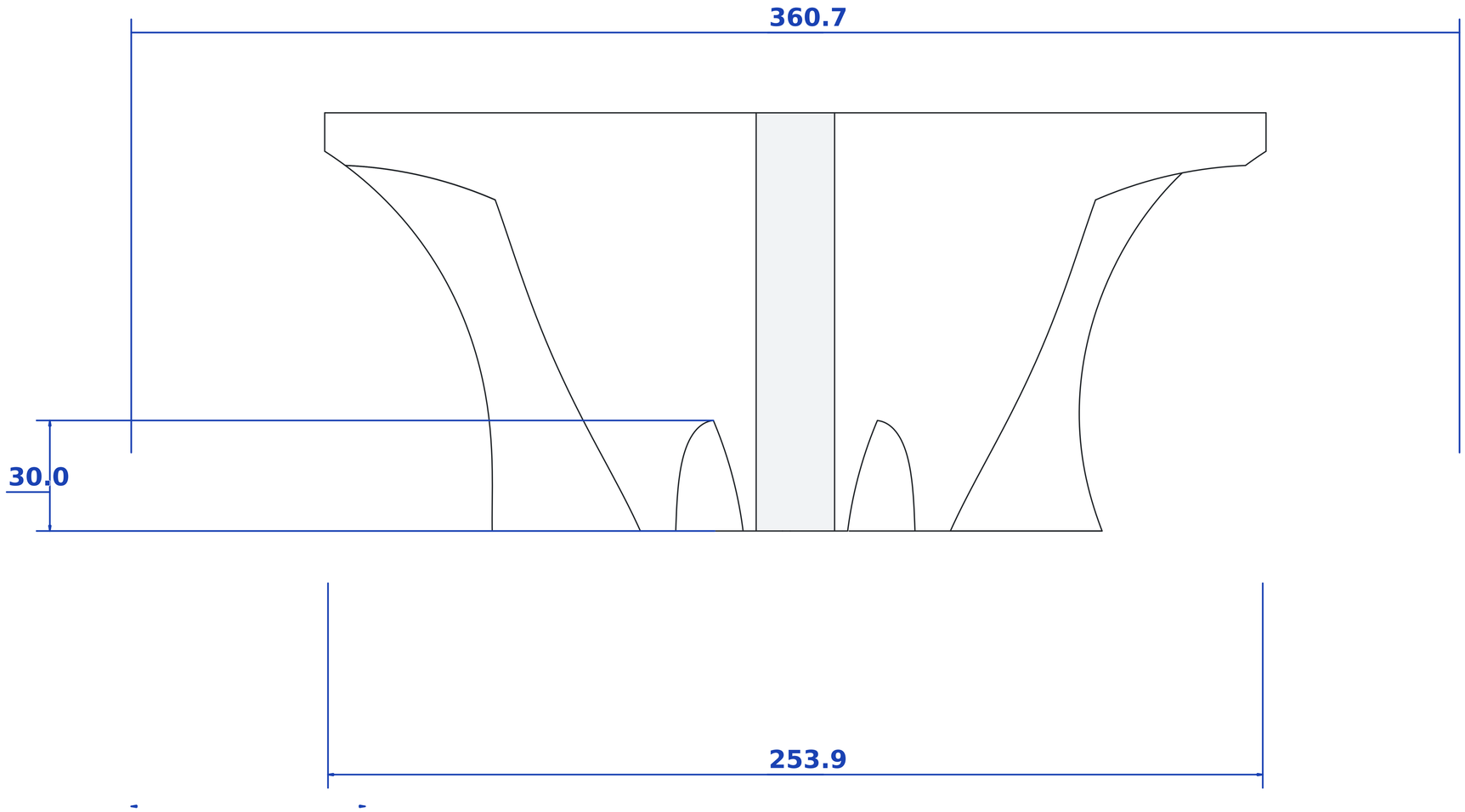
360.7
30.0
253.9