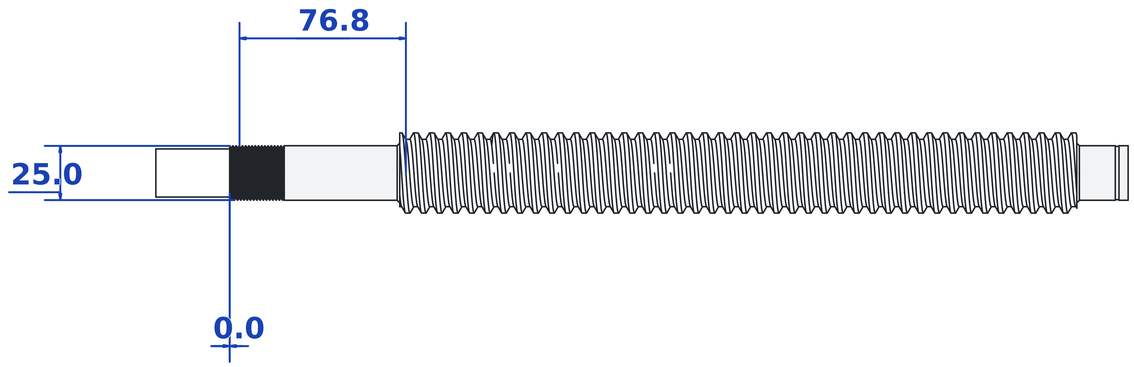
76.8
25.0
0.0