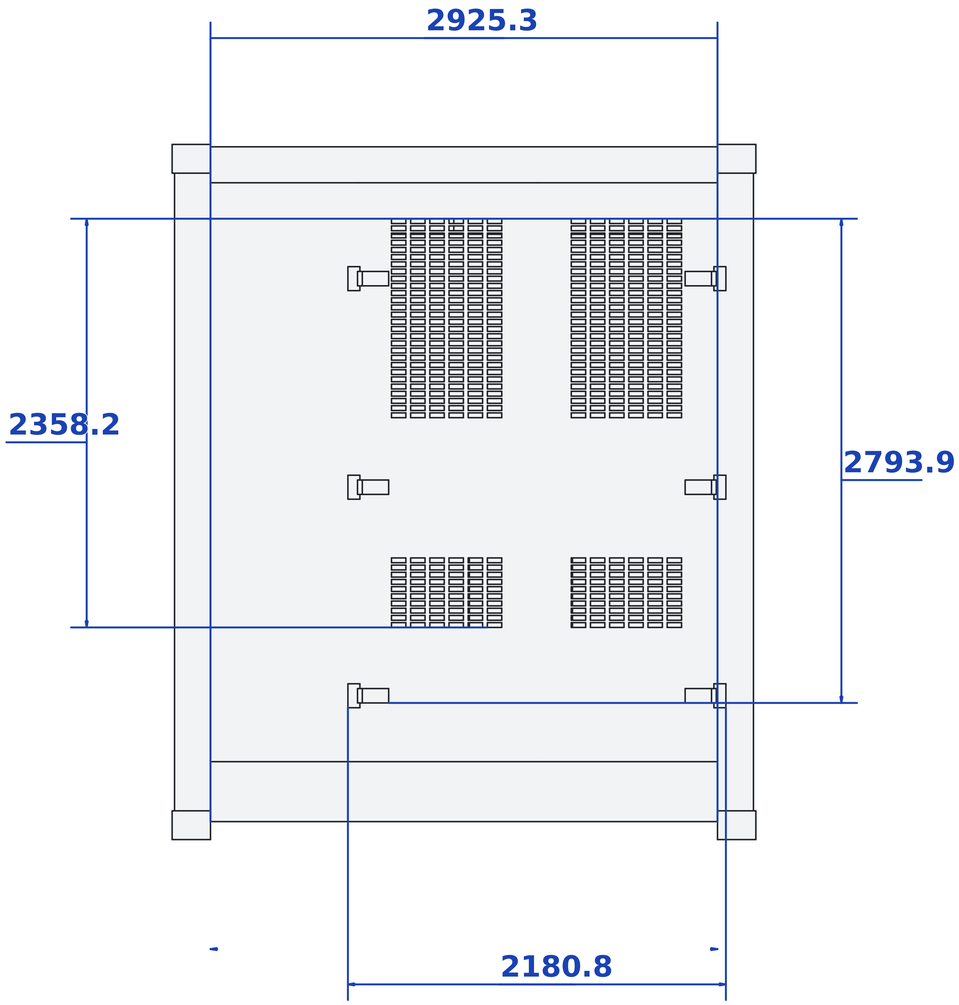
2925.3
2358.2
2793.9
2180.8