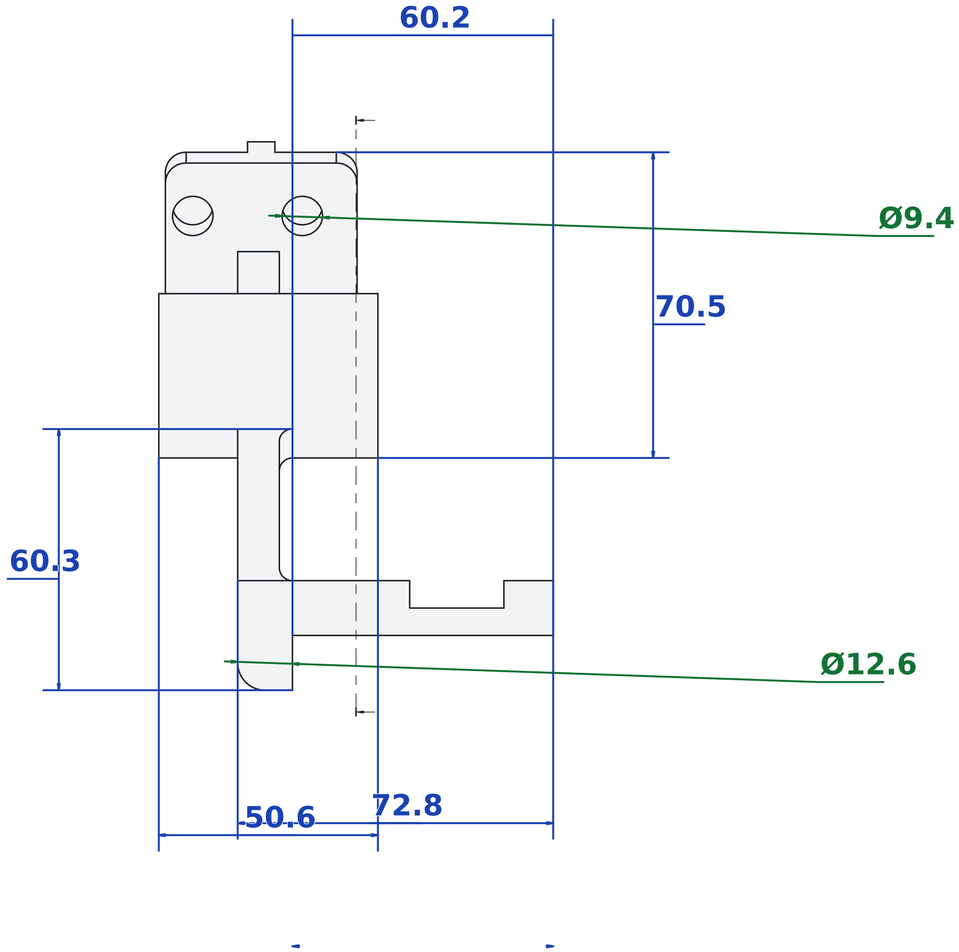
60.2
Ø9.4
70.5
60.3
Ø12.6
50.6
72.8

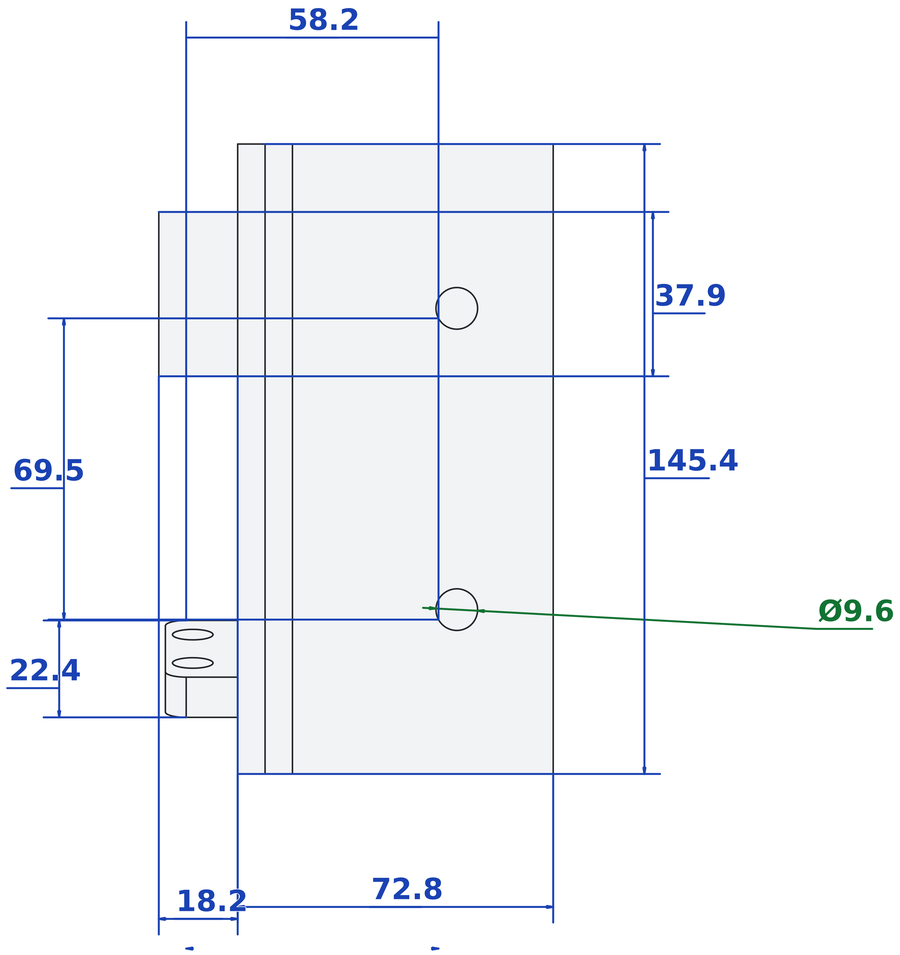
58.2
37.9
69.5
145.4
Ø9.6
22.4
18.2
72.8

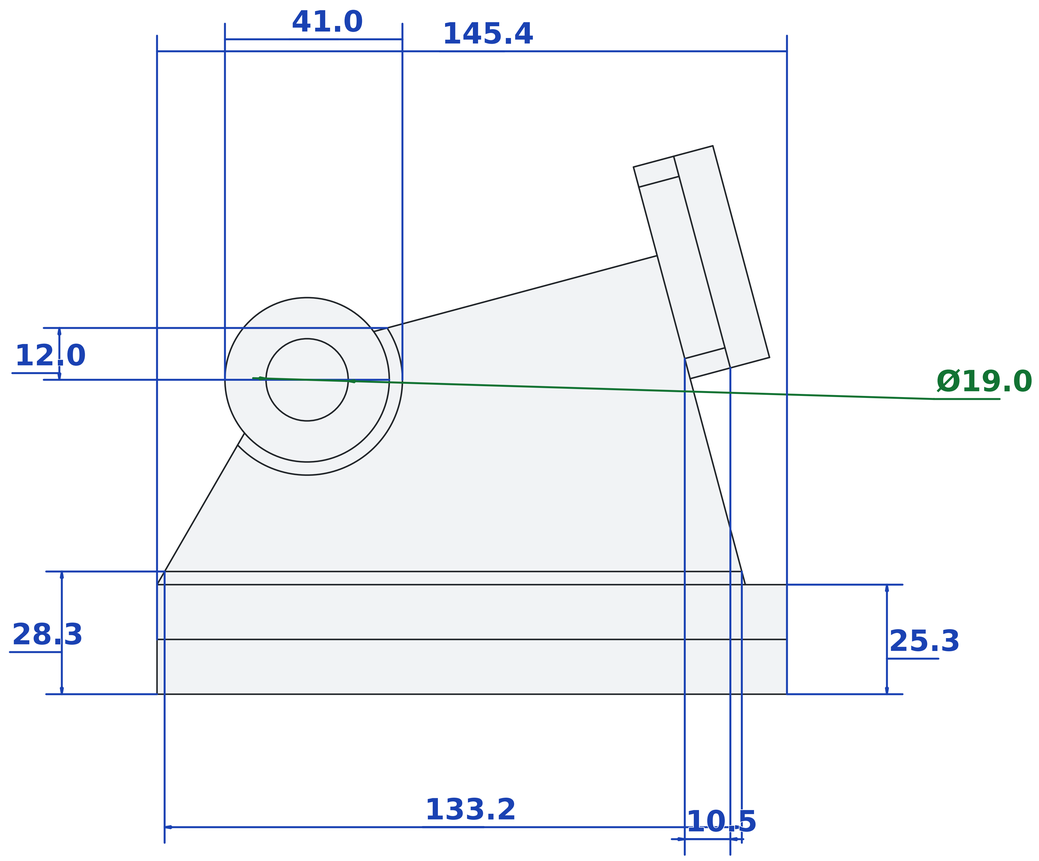
41.0
145.4
12.0
Ø19.0
28.3
25.3
133.2
10.5

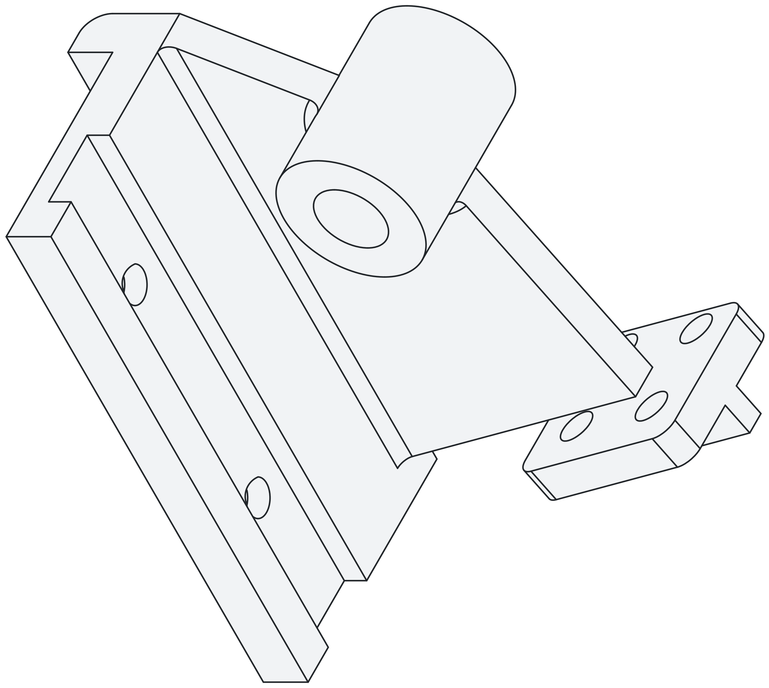

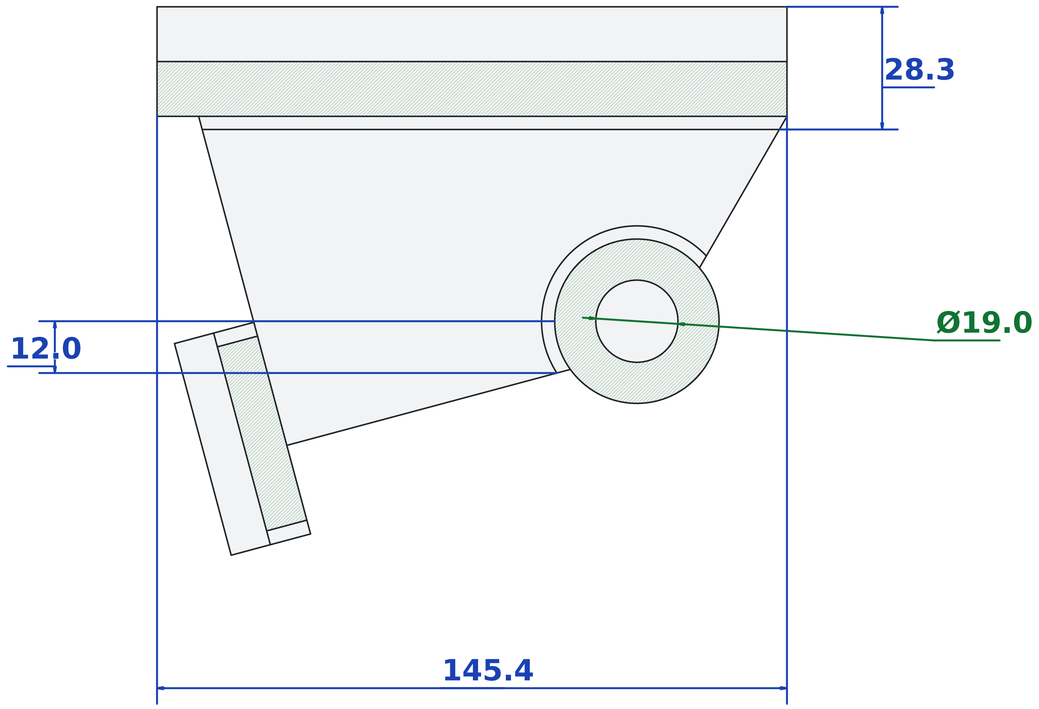
28.3
Ø19.0
12.0
145.4