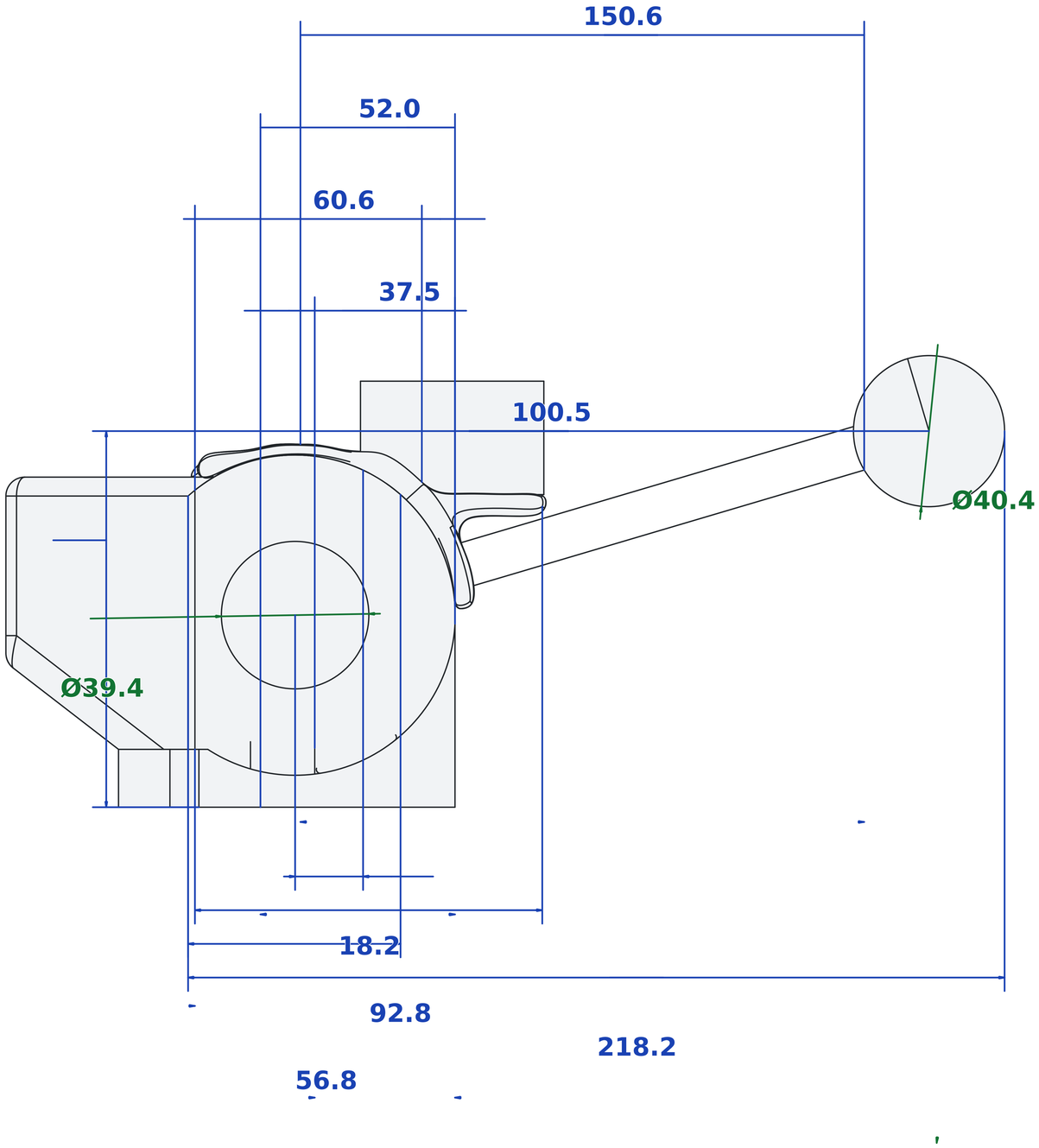
150.6
52.0
60.6
37.5
100.5
Ø40.4
Ø39.4
18.2
92.8
218.2
56.8