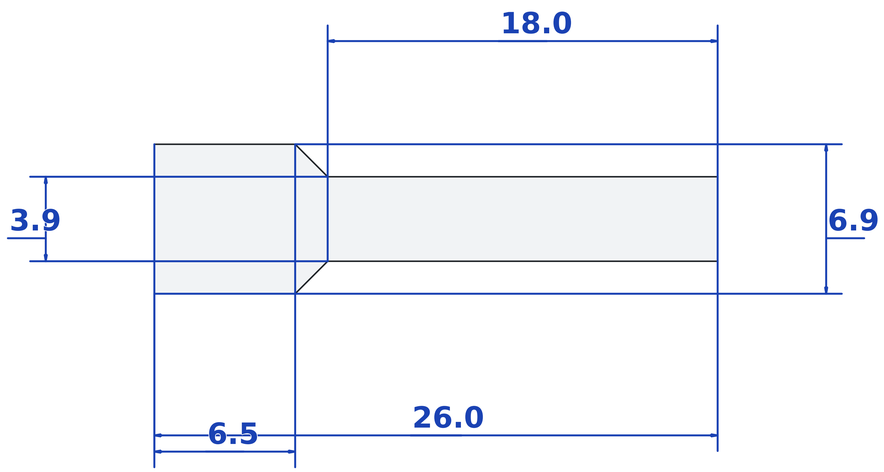
18.0
3.9
6.9
6.5
26.0

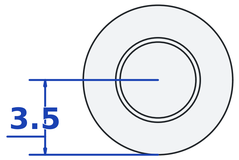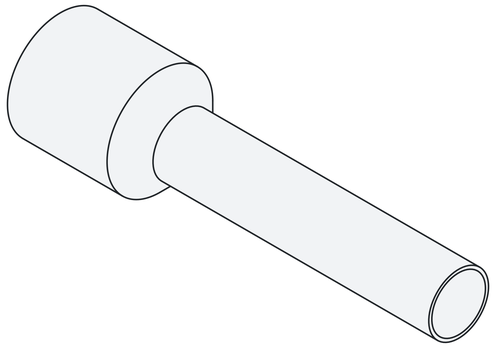
3.5