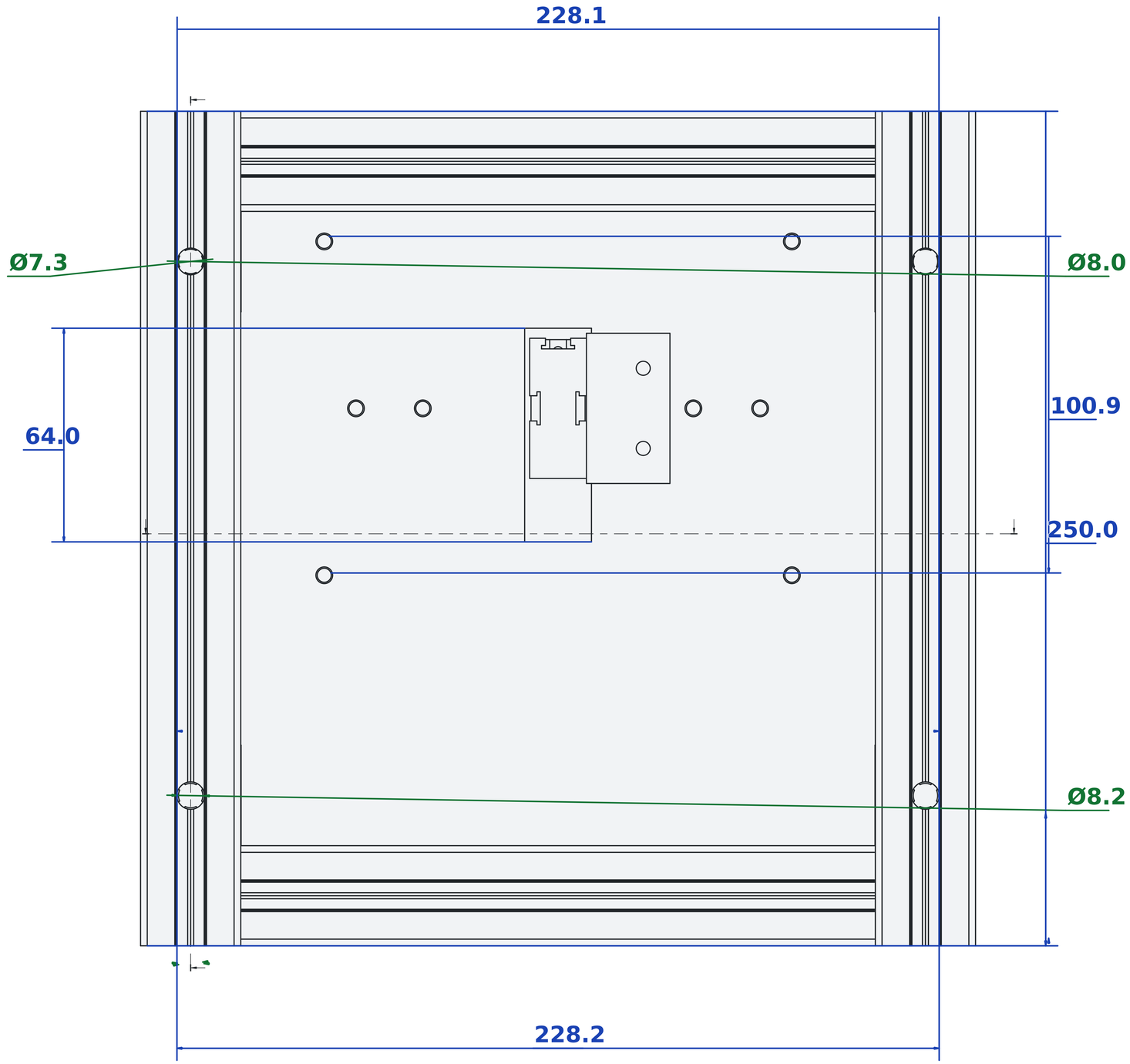
228.1
Ø7.3
Ø8.0
64.0
100.9
250.0
Ø8.2
228.2

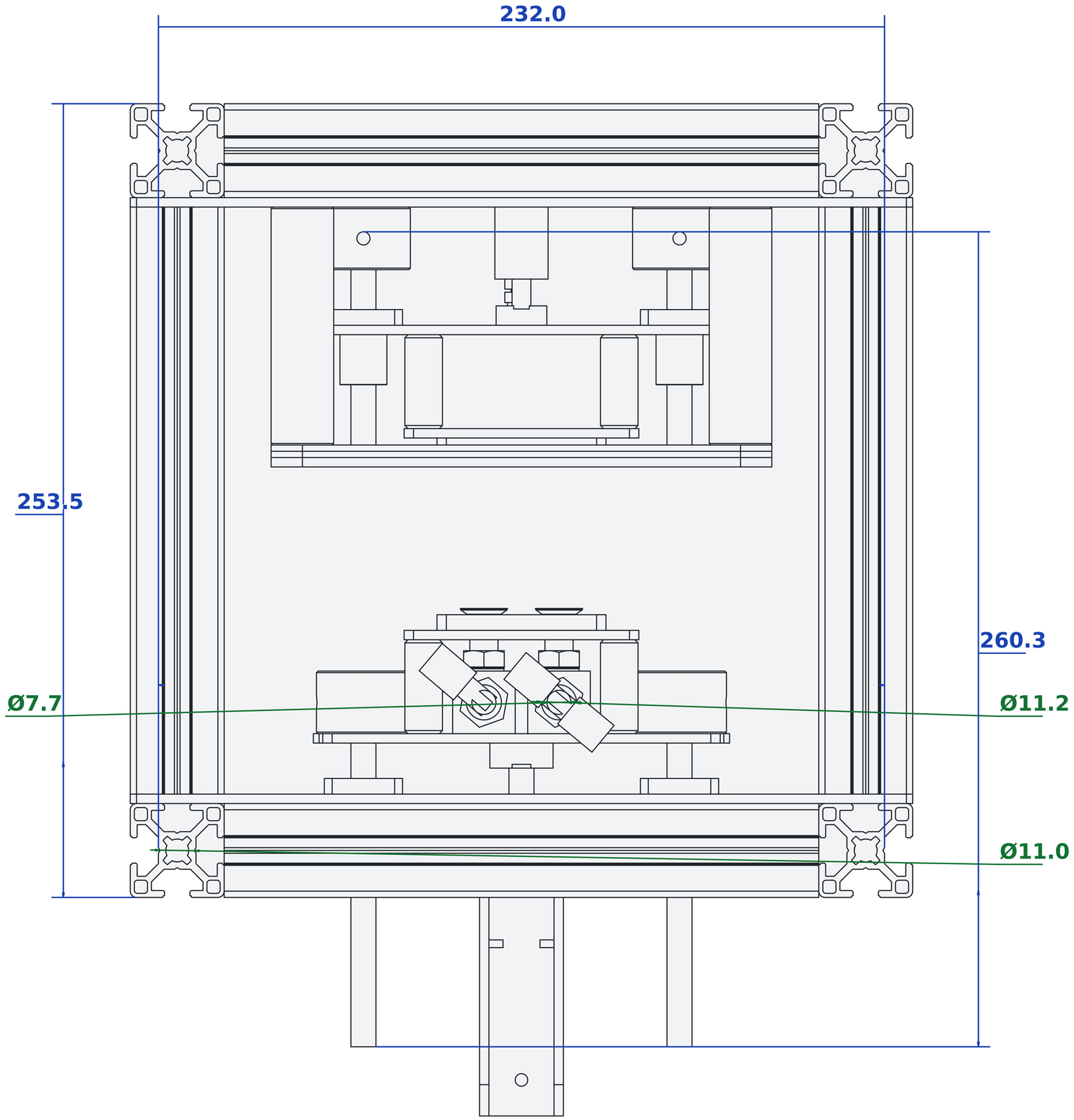
232.0
253.5
260.3
Ø7.7
Ø11.2
Ø11.0

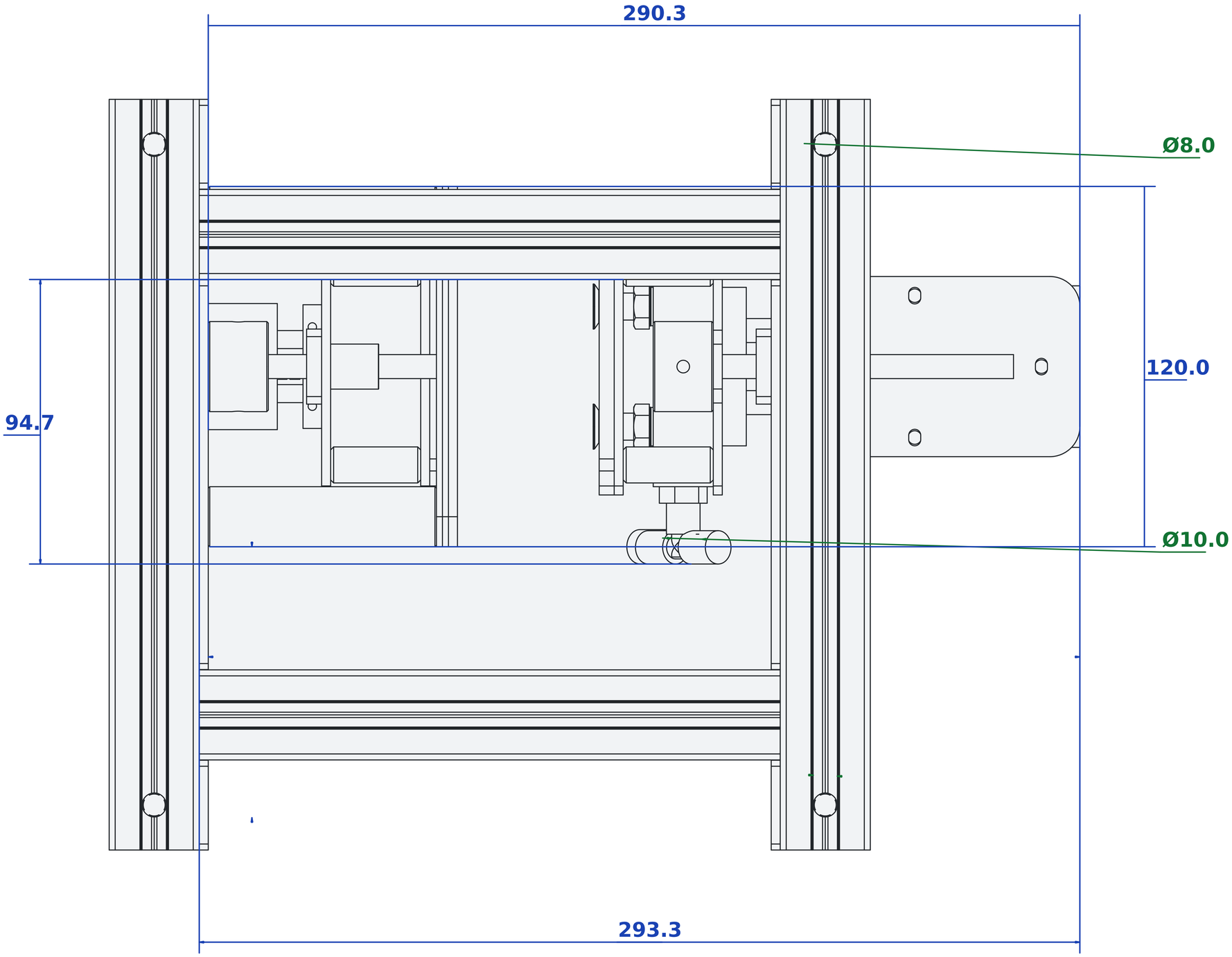
290.3
Ø8.0
120.0
94.7
Ø10.0
293.3

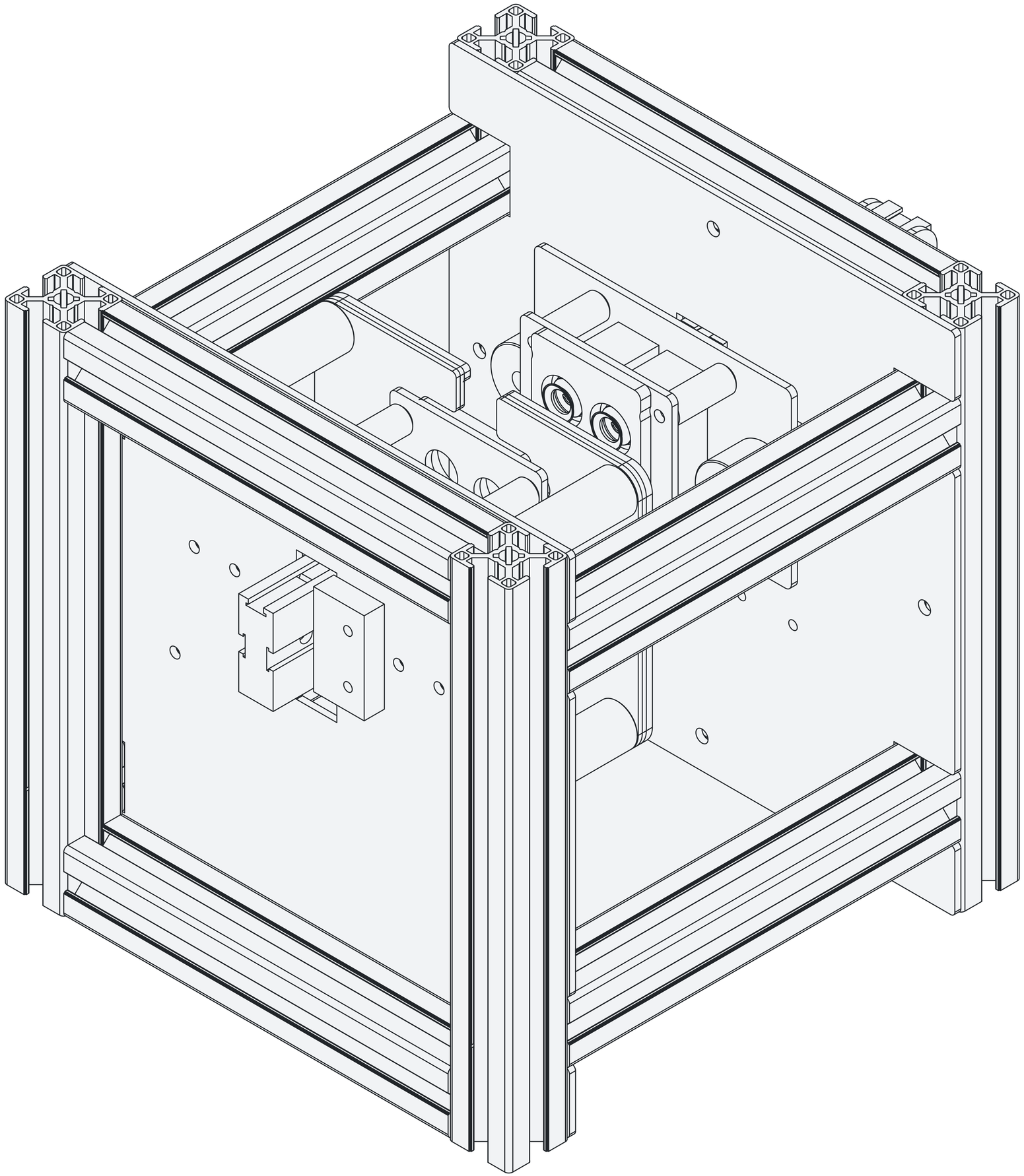

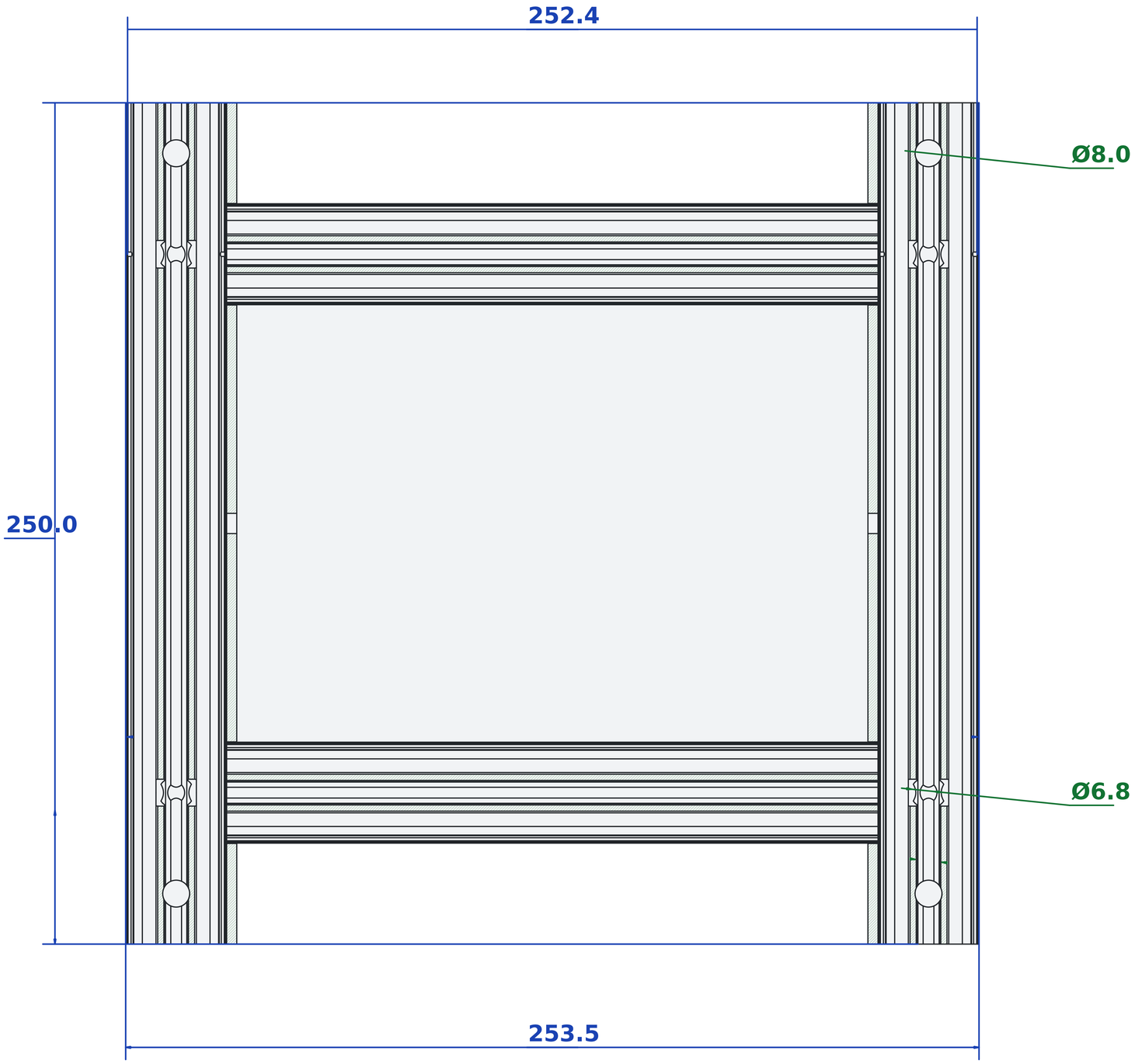
252.4
Ø8.0
250.0
Ø6.8
253.5

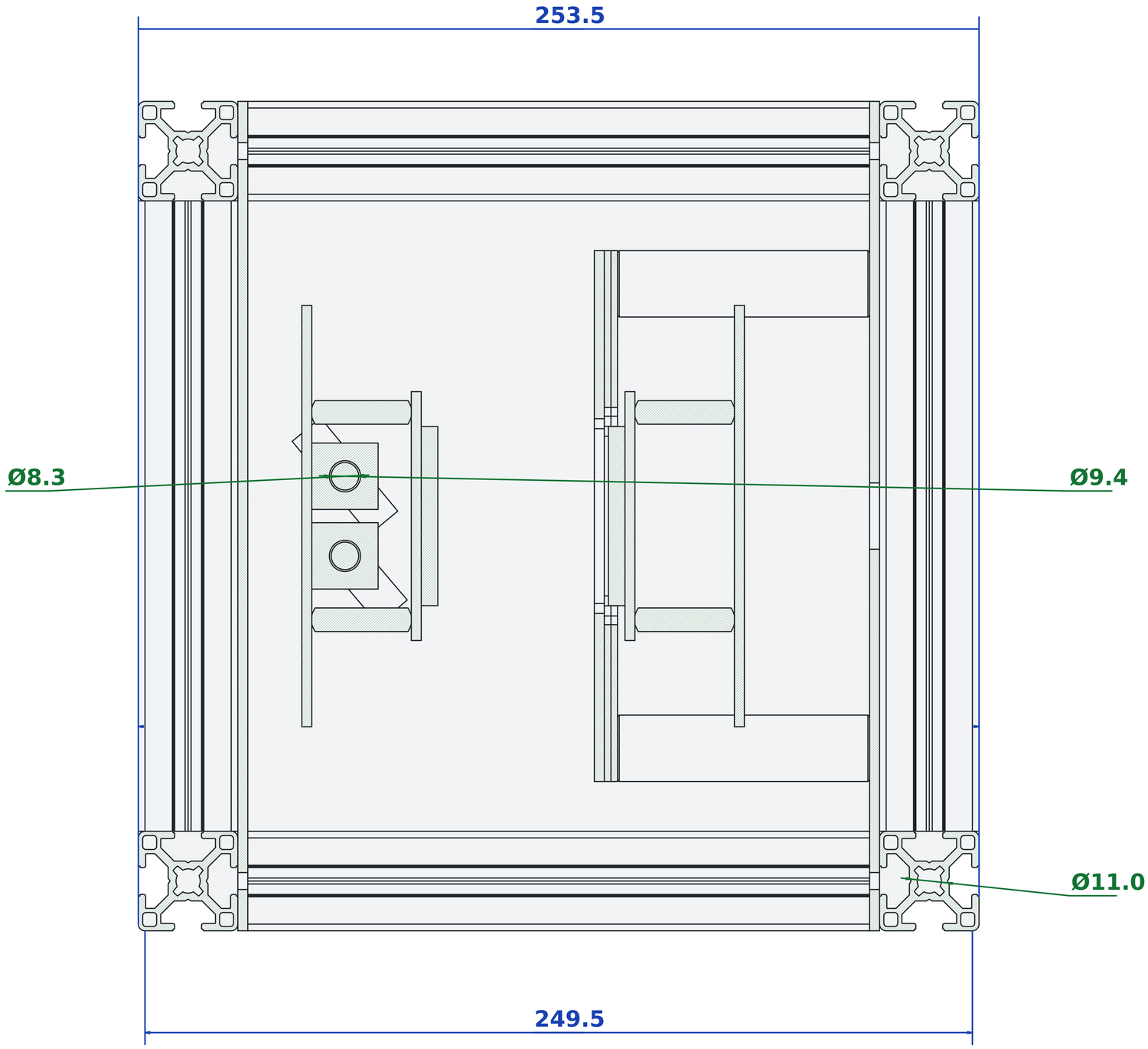
253.5
Ø8.3
Ø9.4
Ø11.0
249.5