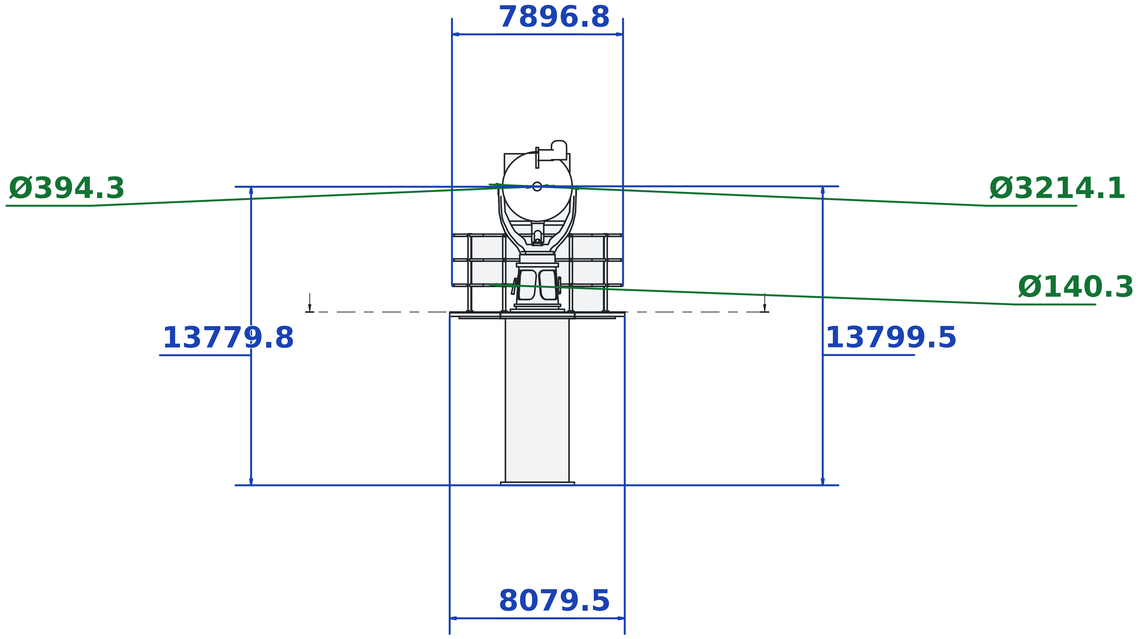
7896.8
Ø394.3
Ø3214.1
Ø140.3
13779.8
13799.5
8079.5

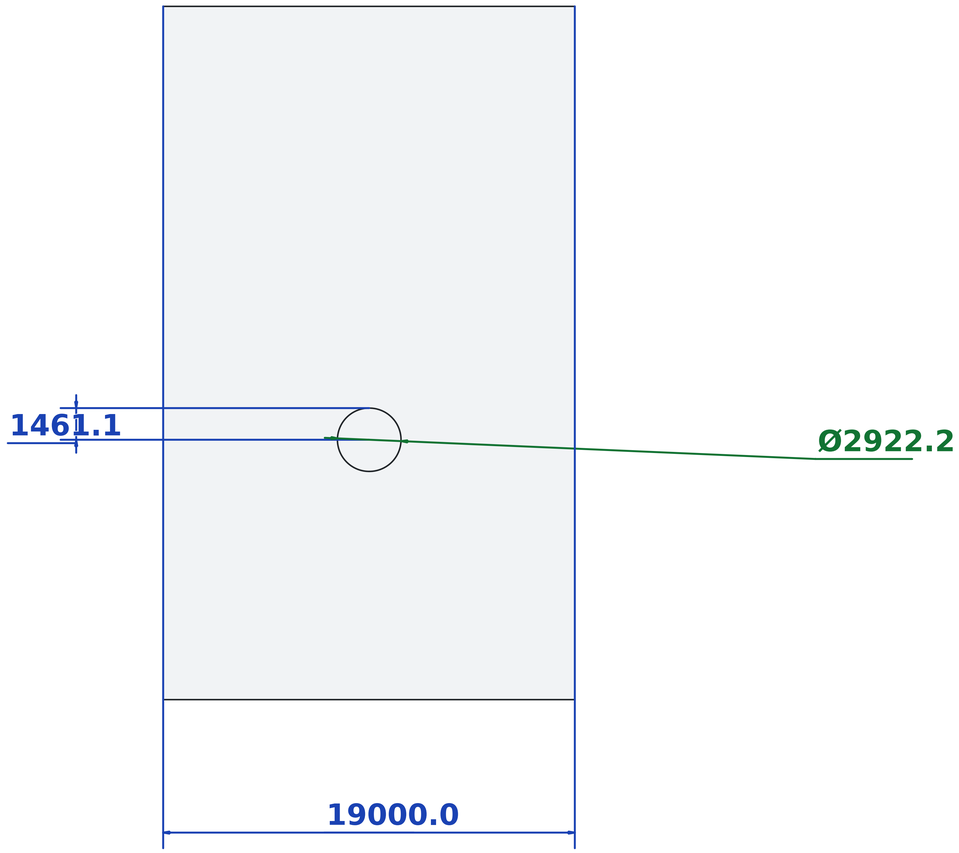
1461.1
Ø2922.2
19000.0

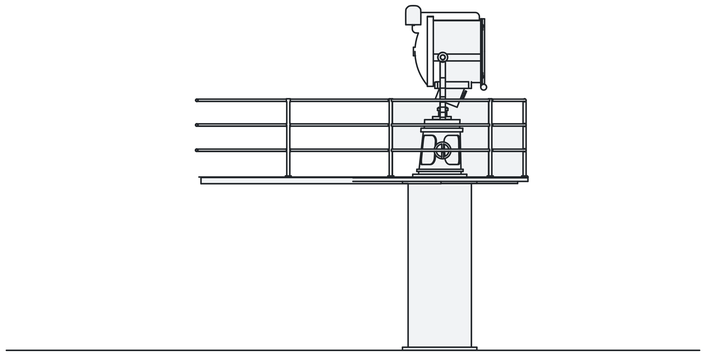

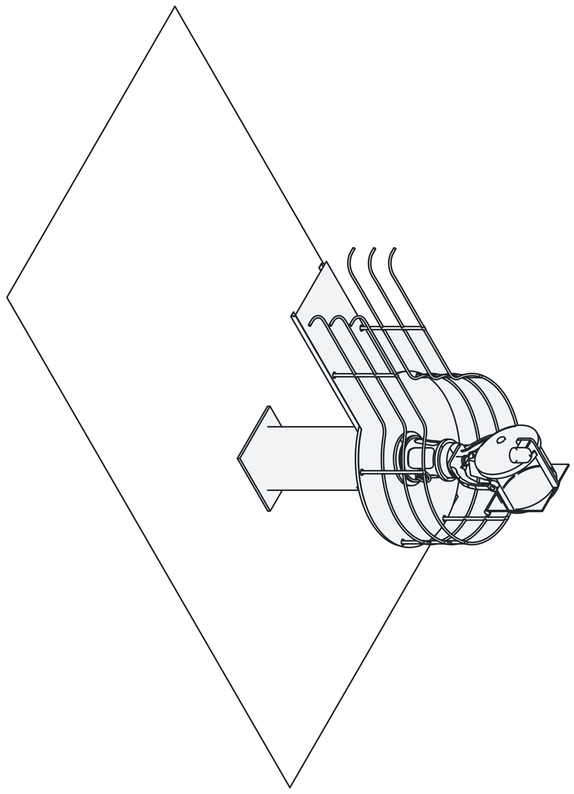

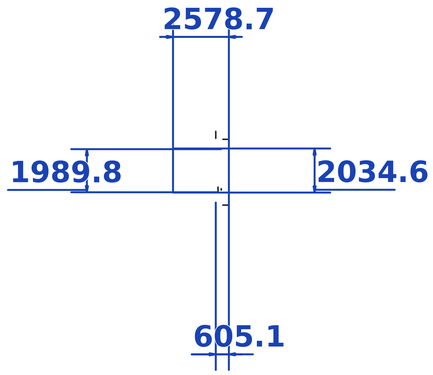
2578.7
1989.8
2034.6
605.1