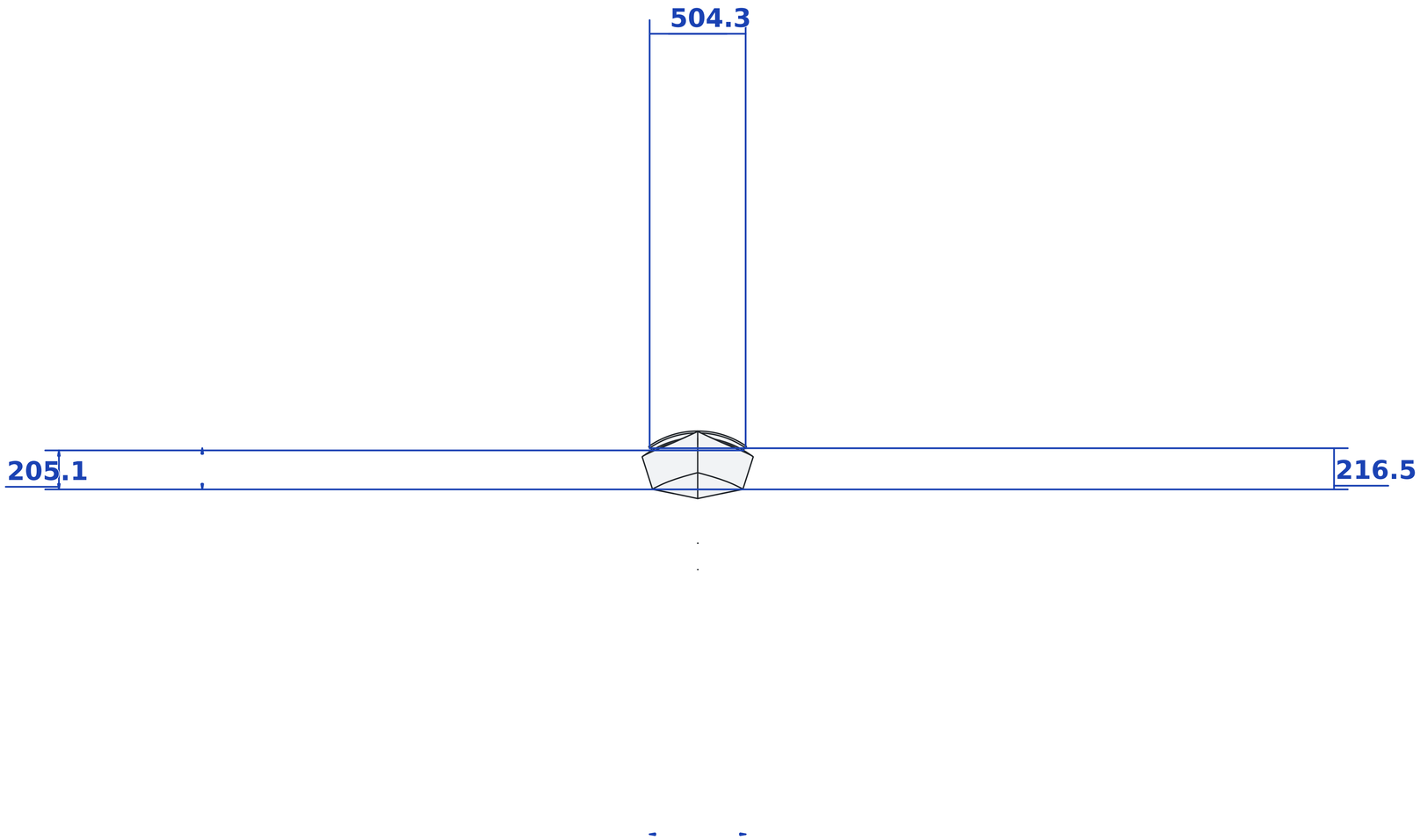
504.3
205.1
216.5