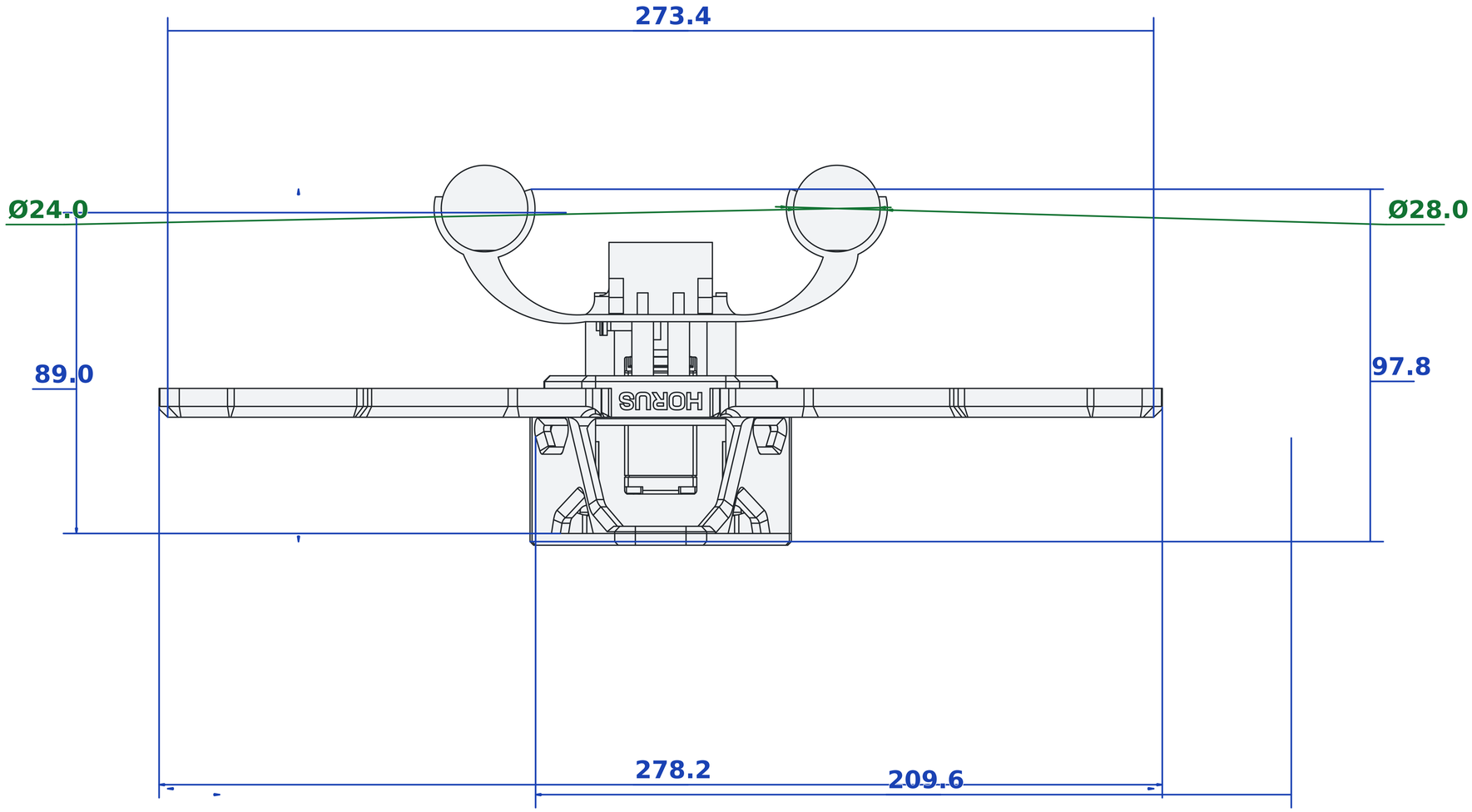
273.4
Ø24.0
Ø28.0
89.0
97.8
HORUS
278.2
209.6