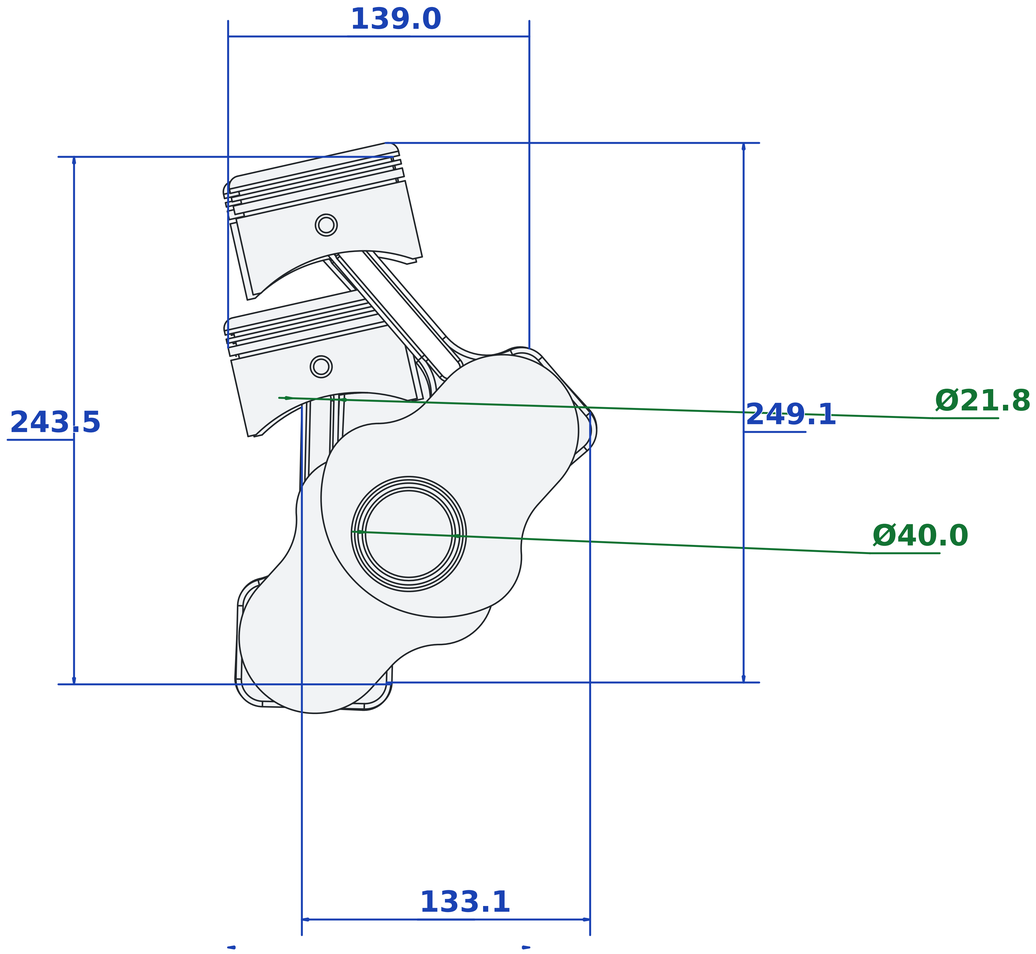
139.0
243.5
249.1
Ø21.8
Ø40.0
133.1

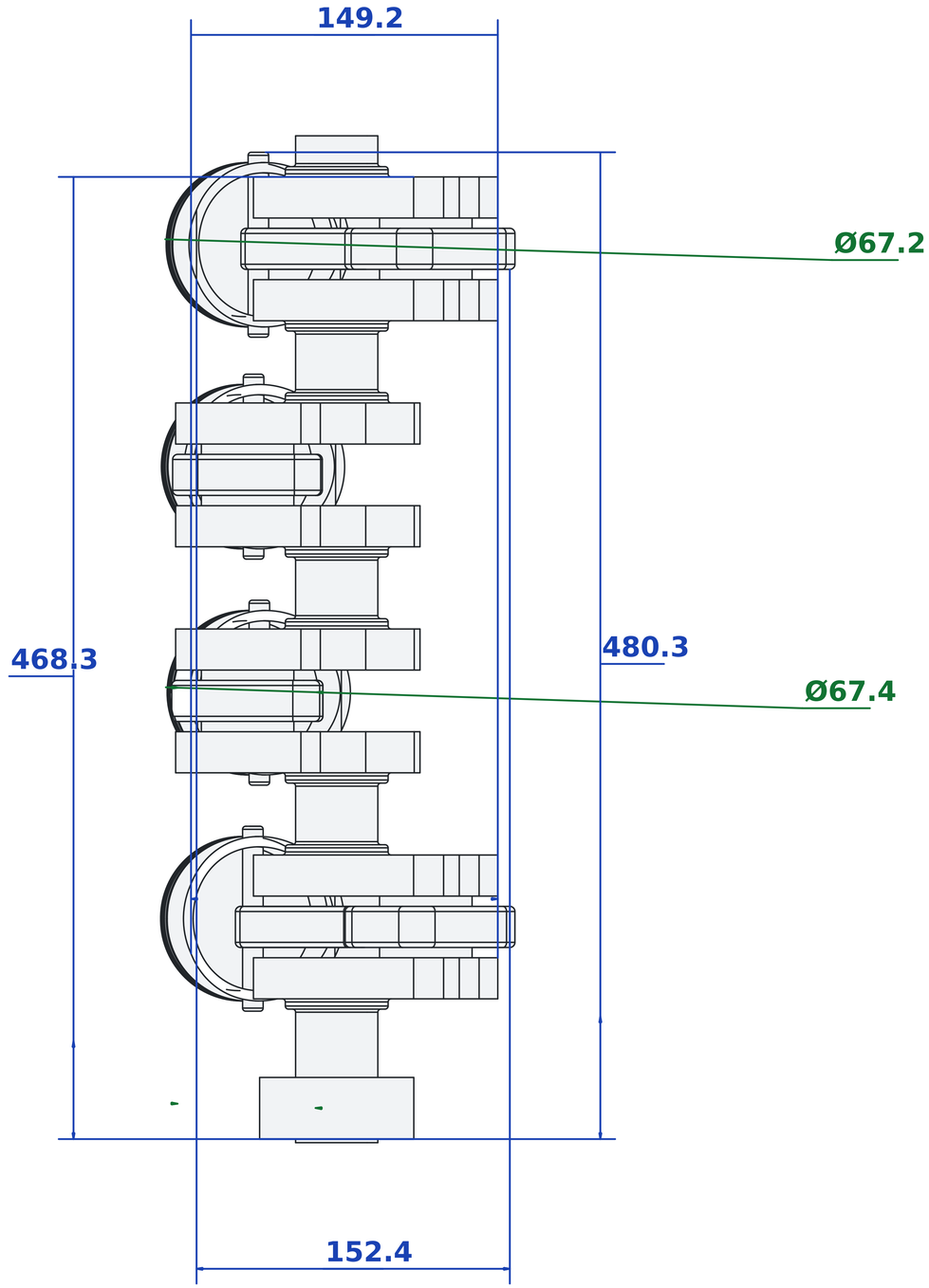
149.2
Ø67.2
468.3
480.3
Ø67.4
152.4

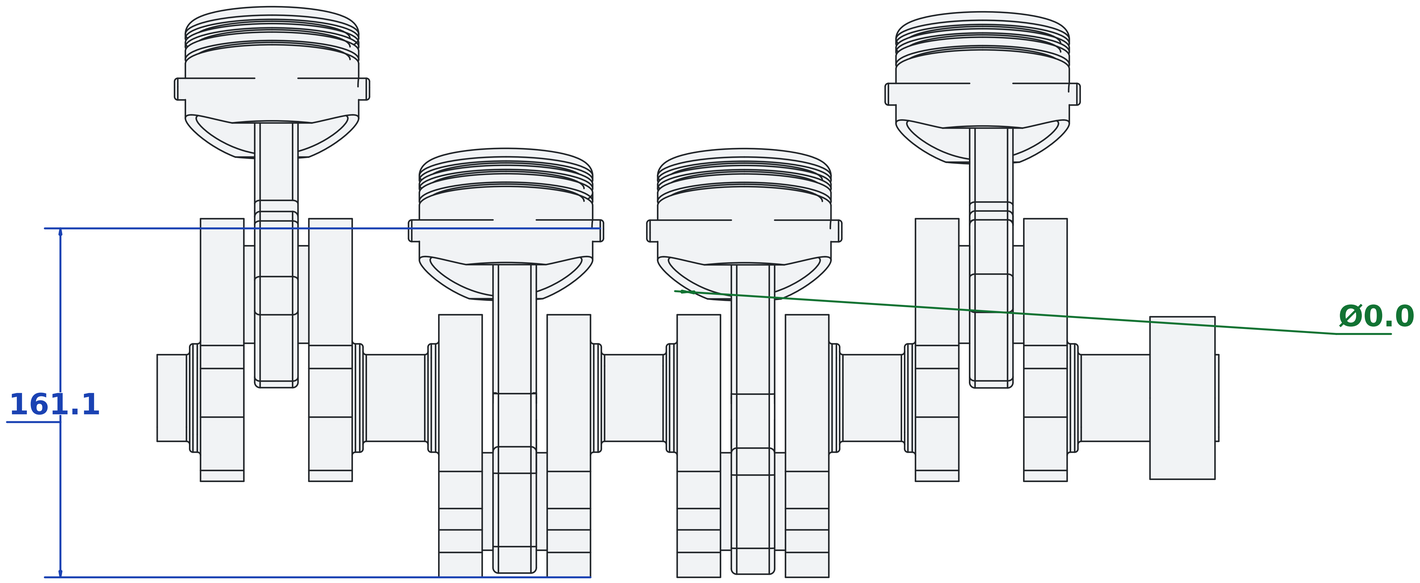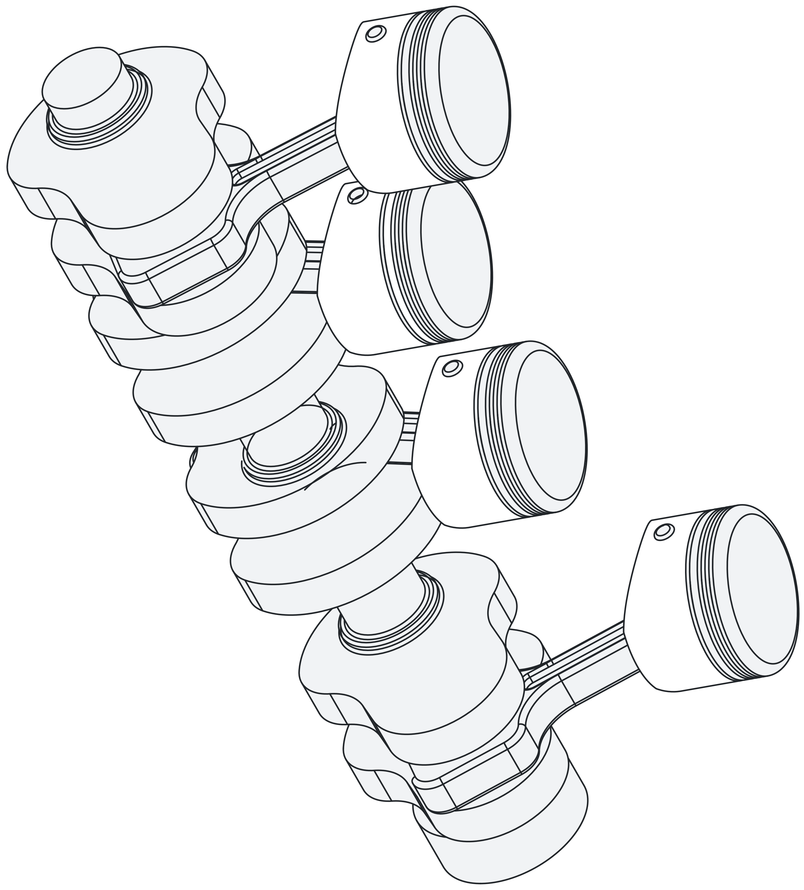
161.1
Ø0.0