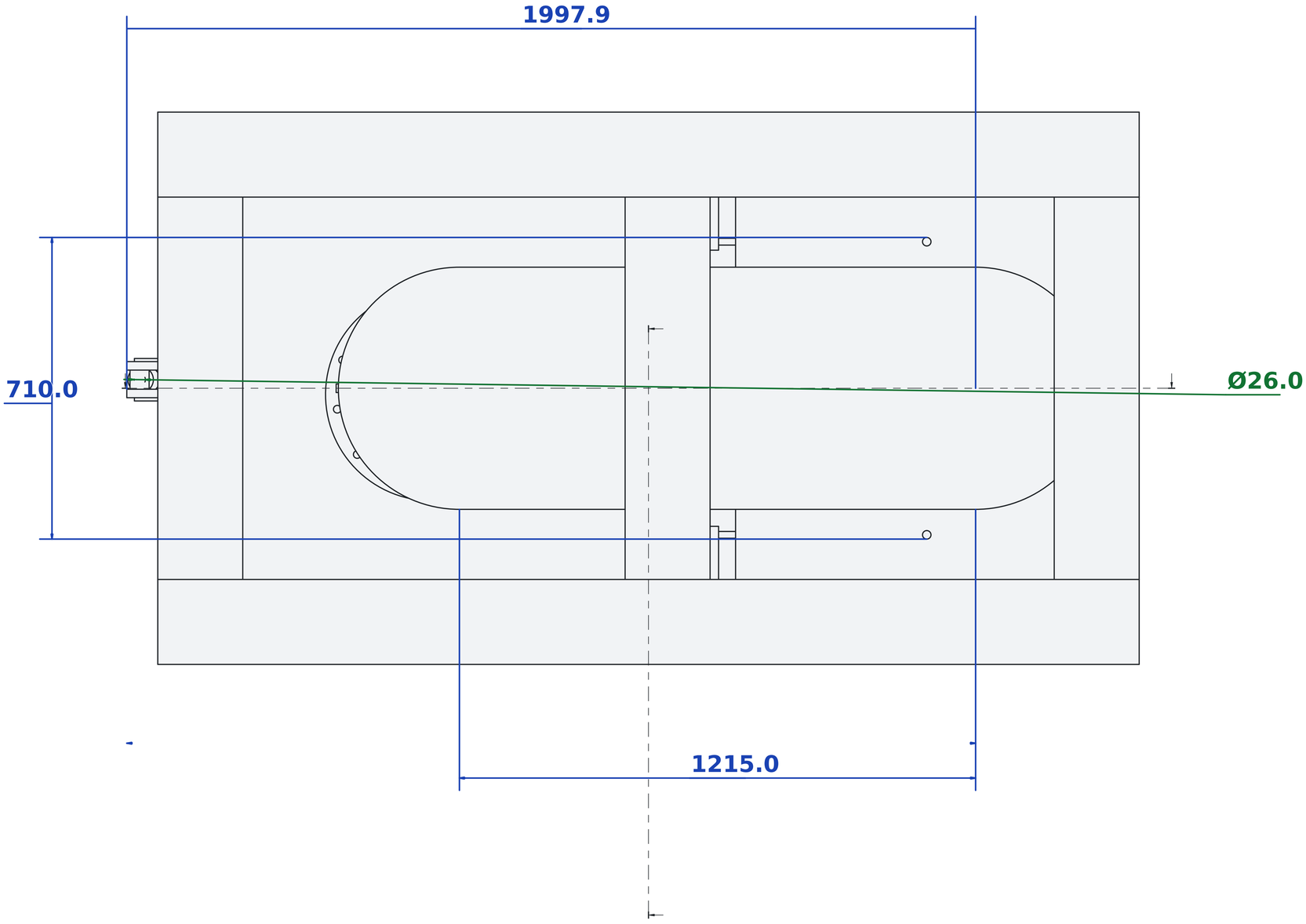
1997.9
710.0
Ø26.0
1215.0

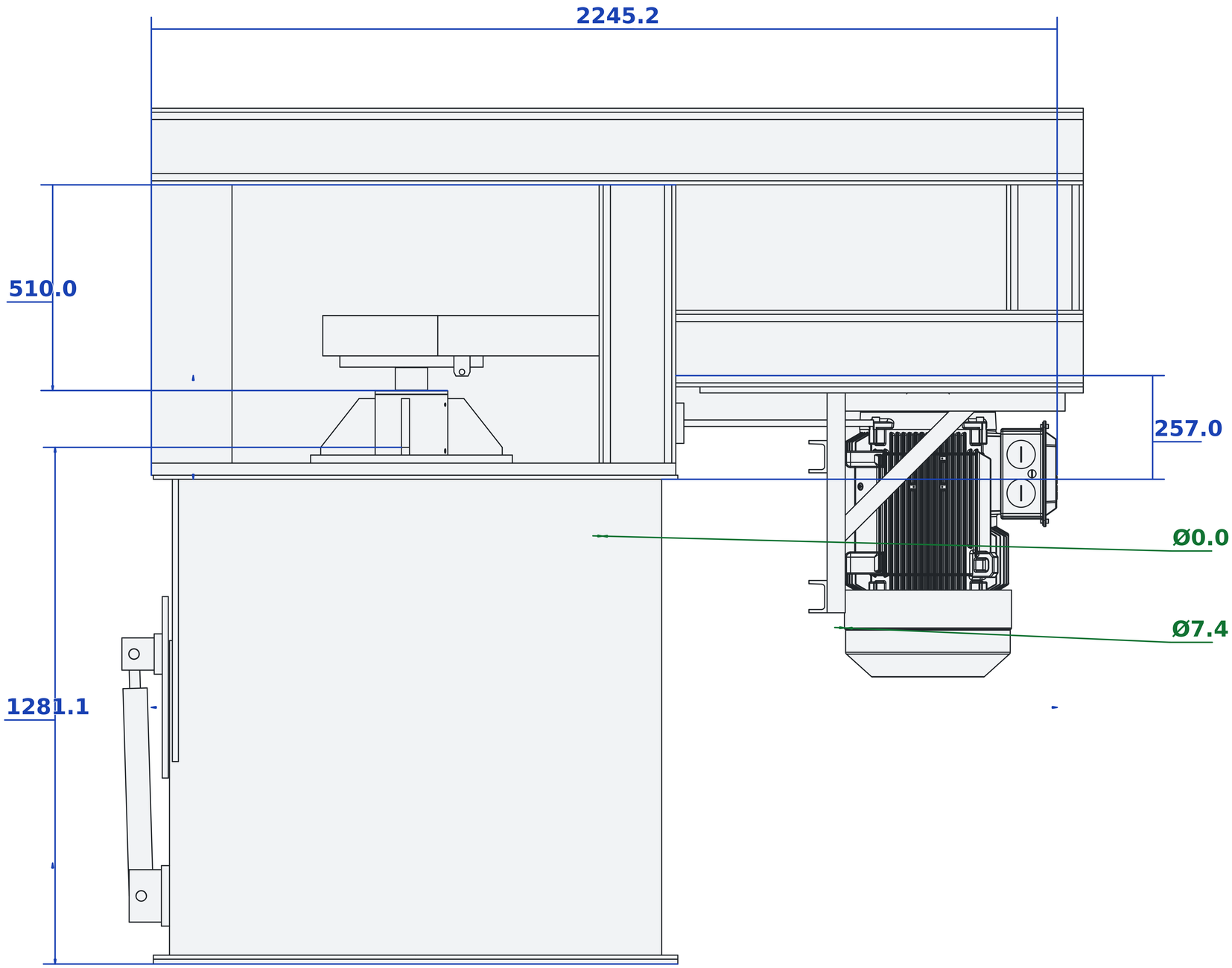
2245.2
510.0
257.0
Ø0.0
Ø7.4
1281.1

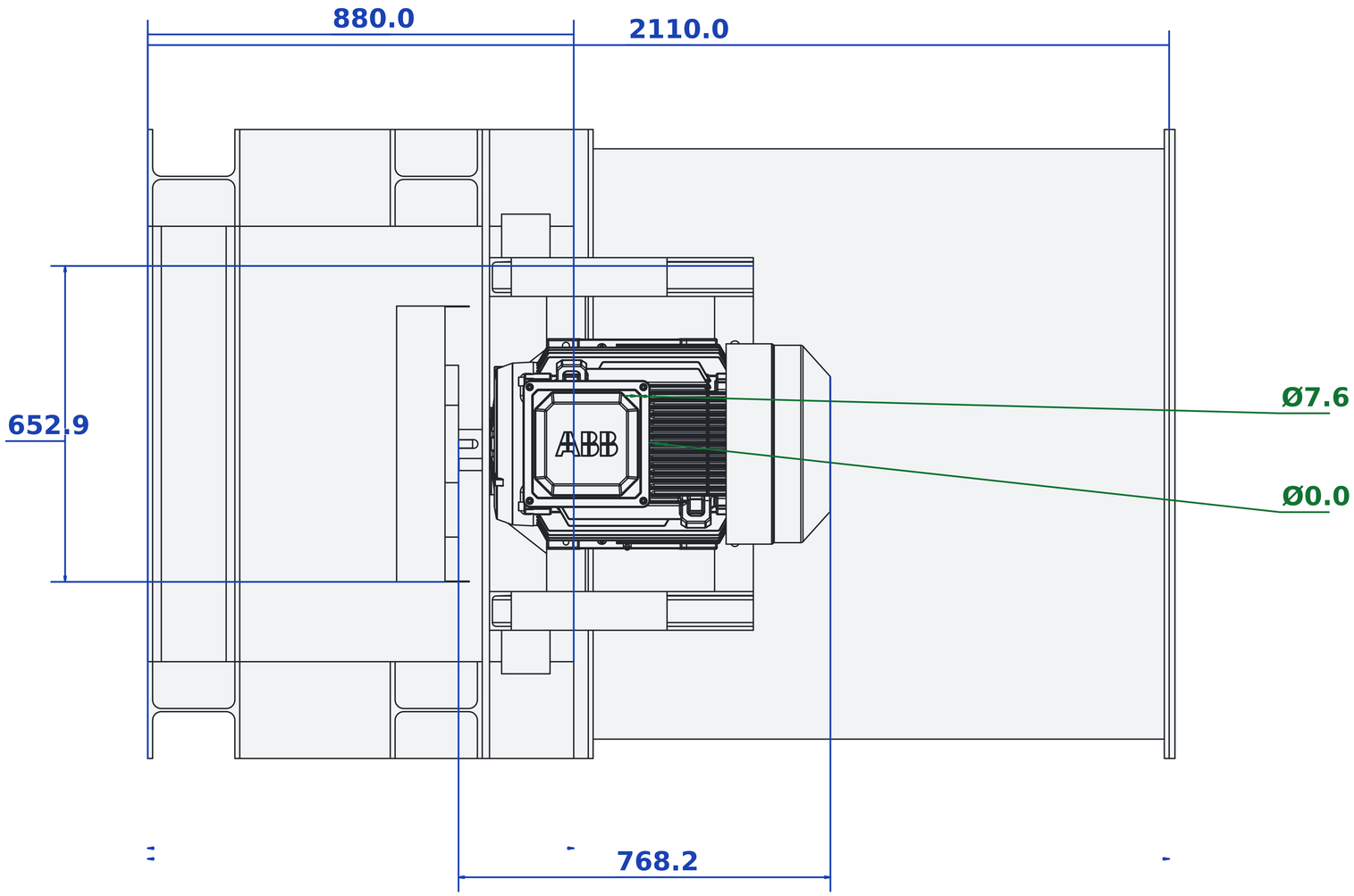
880.0
2110.0
652.9
Ø7.6
Ø0.0
768.2

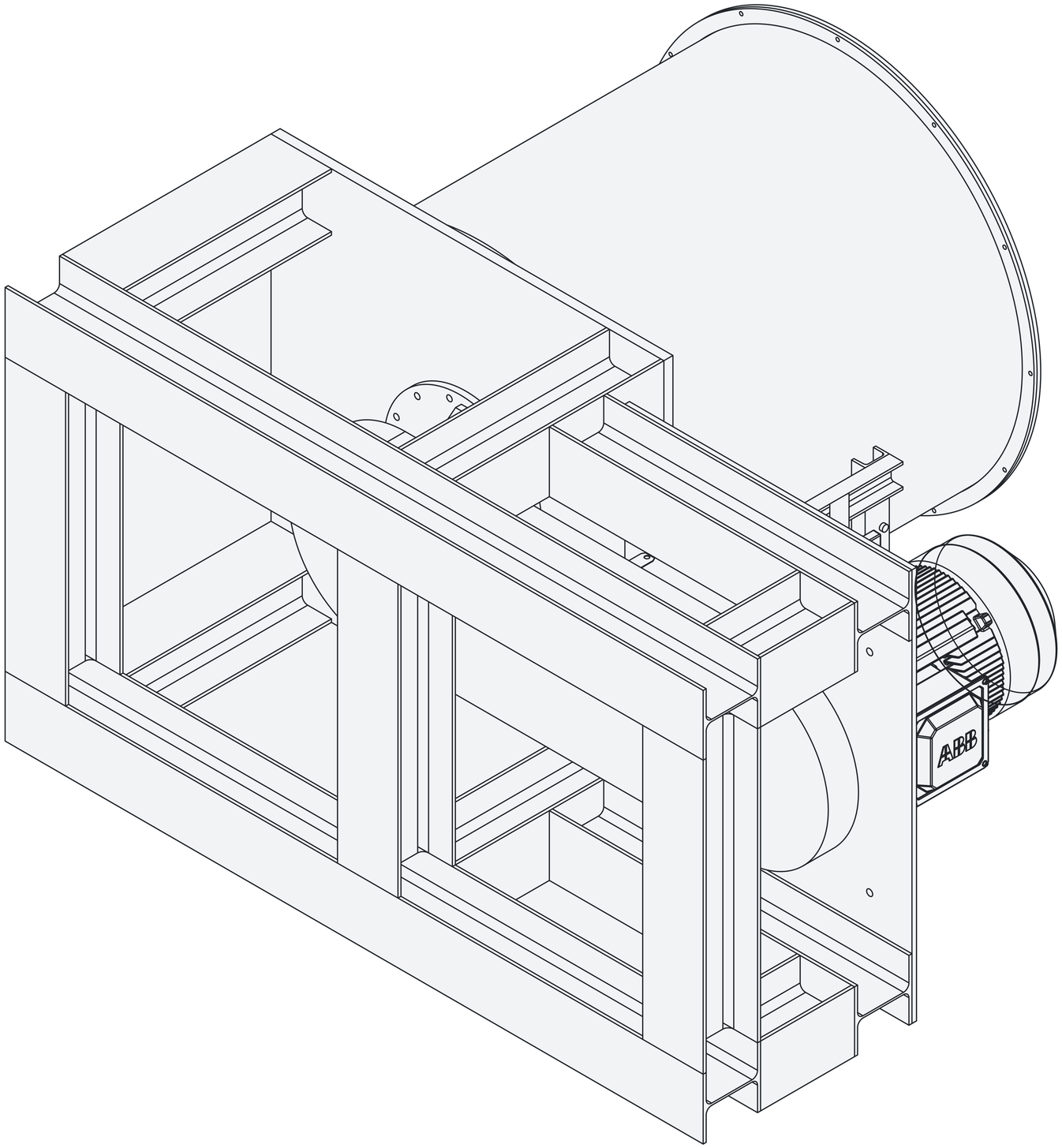
ABB

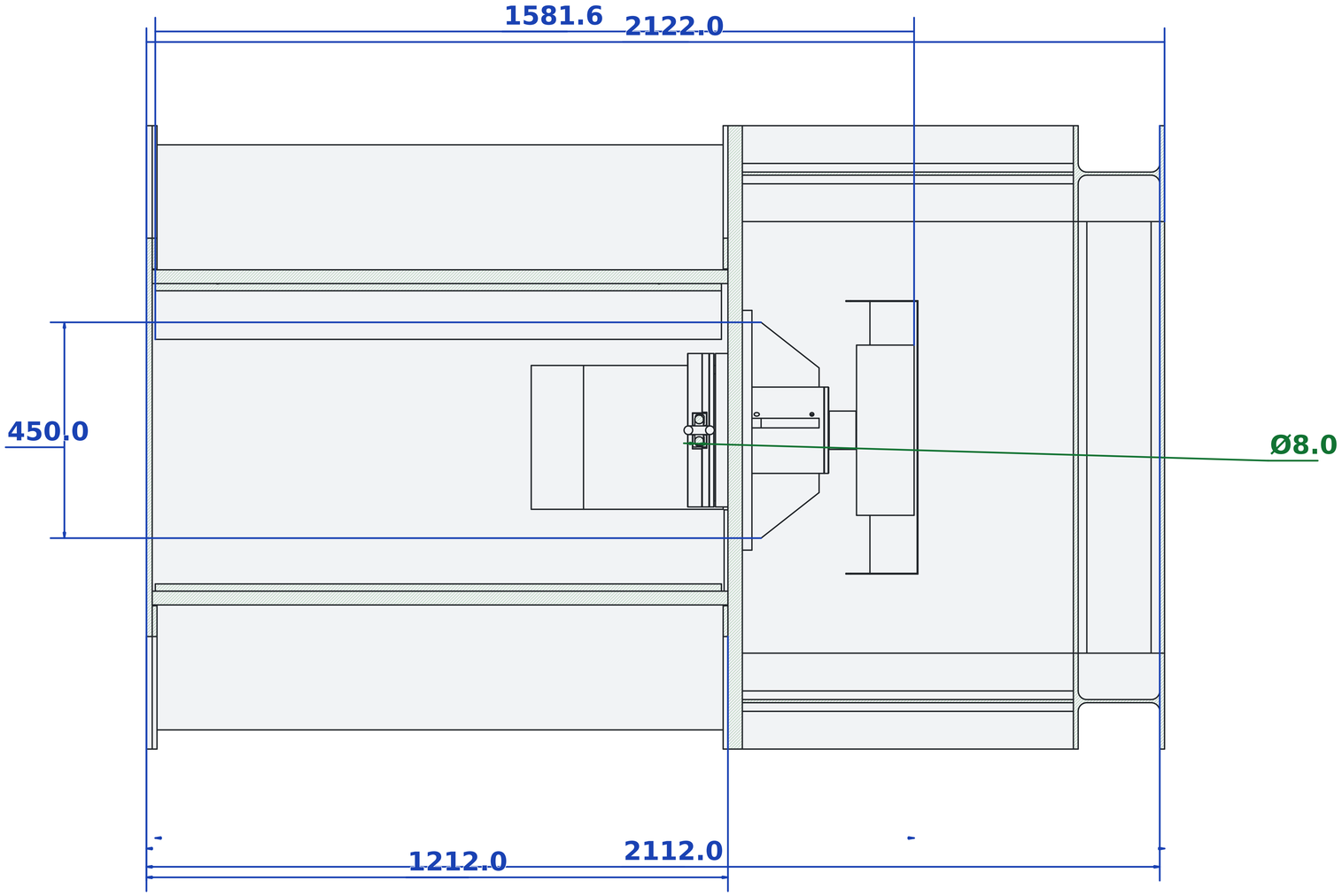
1581.6
2122.0
450.0
Ø8.0
1212.0
2112.0

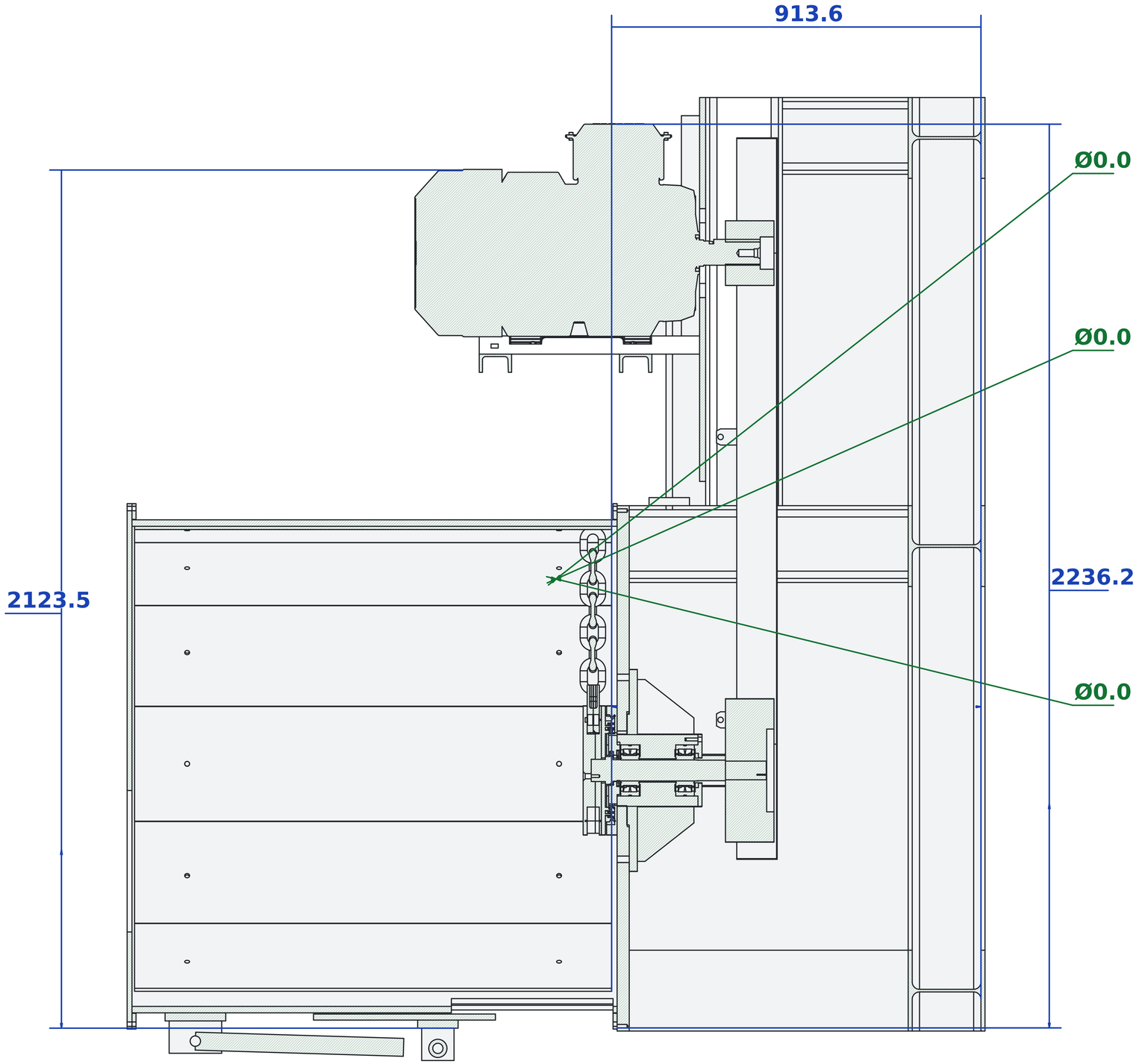
913.6
Ø0.0
Ø0.0
2123.5
2236.2
Ø0.0