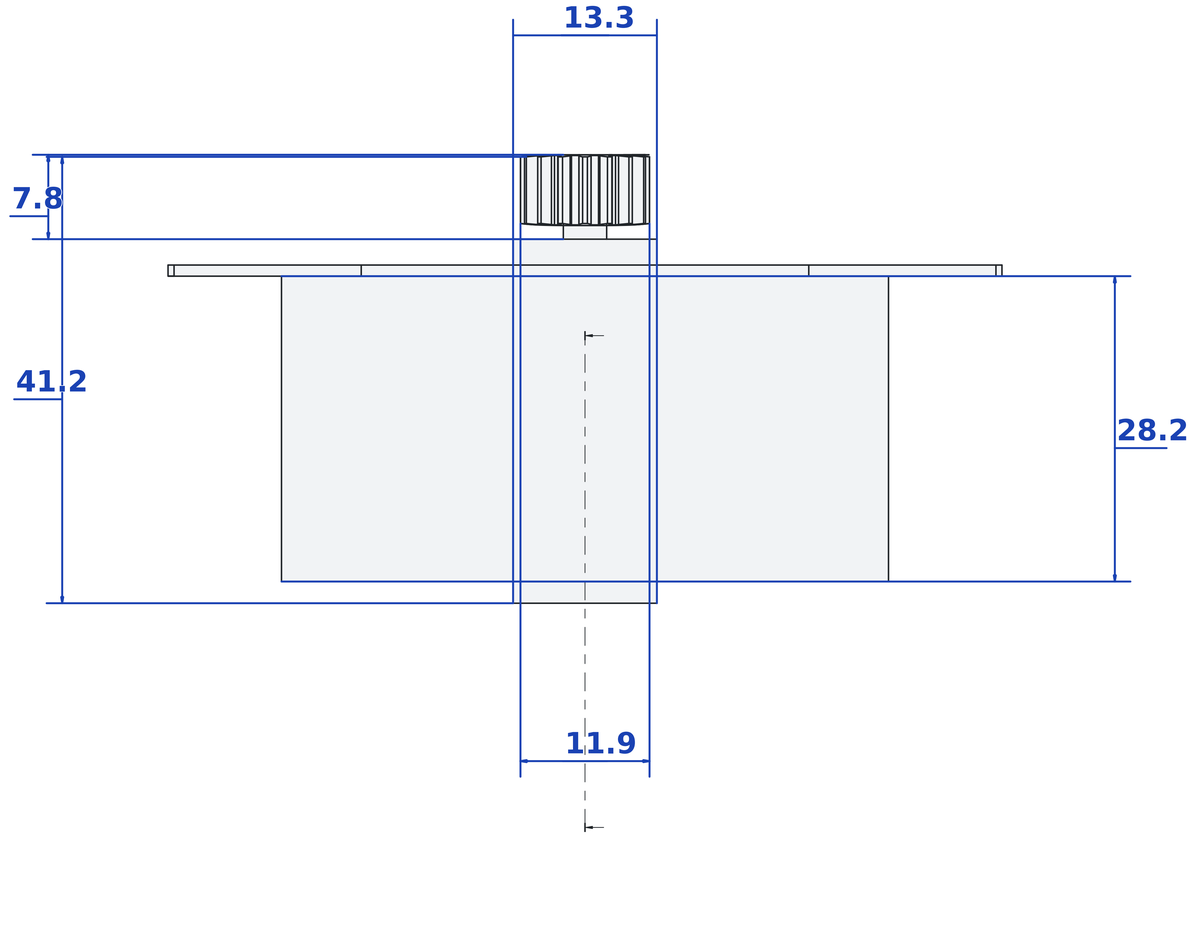
13.3
7.8
41.2
28.2
11.9