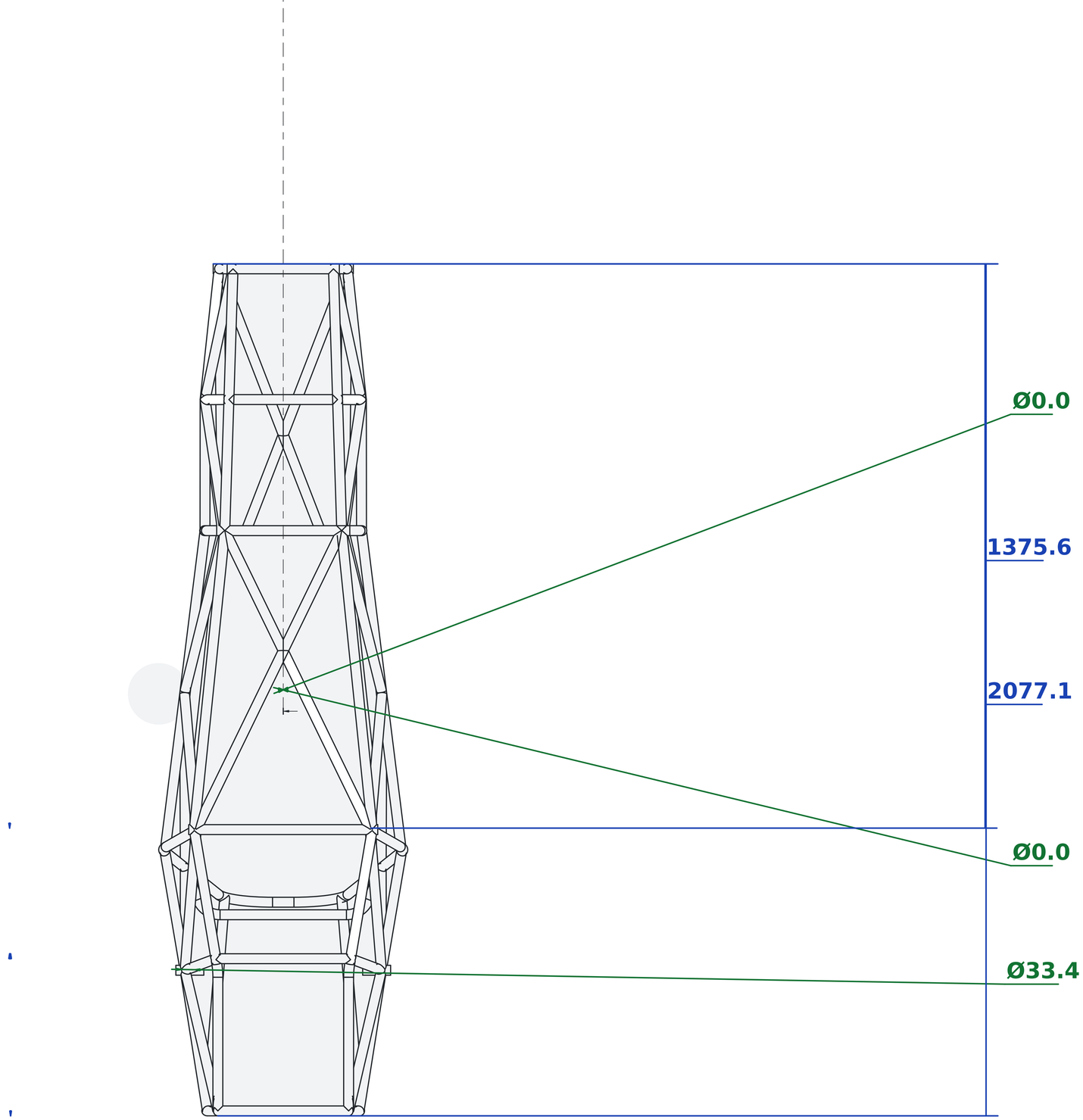
Ø0.0
1375.6
2077.1
Ø0.0
Ø33.4